DYNESS

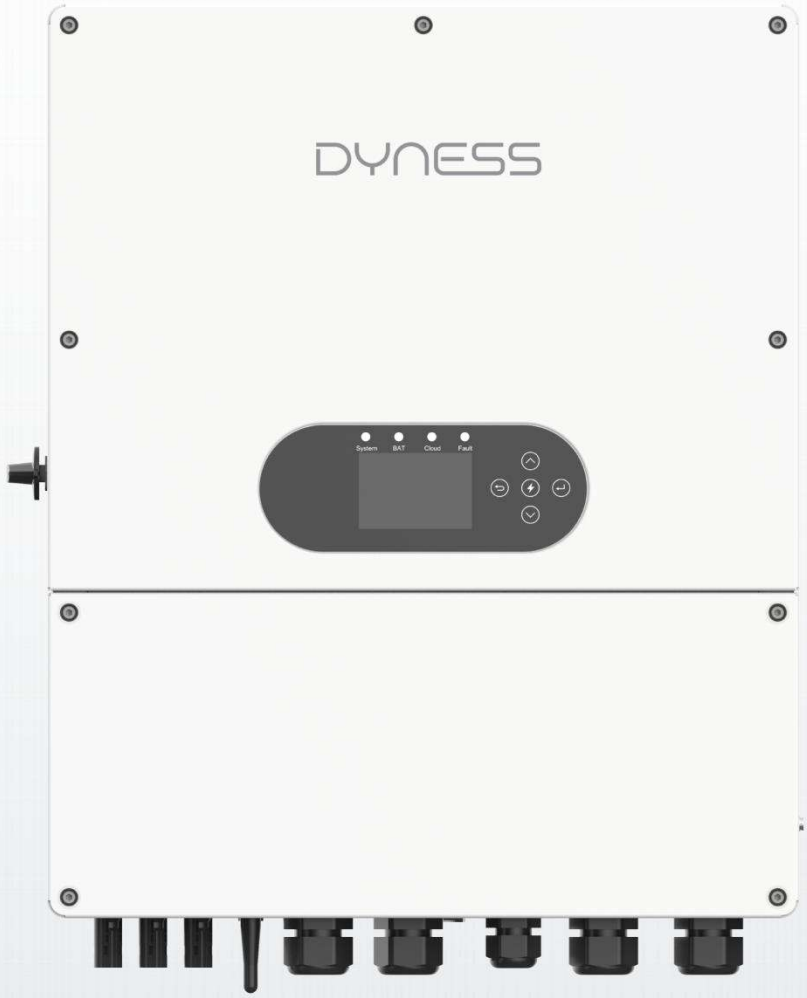

Hybrid Inverter
User Manual

D5K-HT-A
D6K-HT-A
D8K-HT-A
D10K-HT-A
D12K-HT-A
D15K-HT-A

Contents

About APP 1
Install 1
Statement of Law 2
1. About the Manual 3
1.1 Manual Description 3
1.2 Applicable Models 3
1.3 Target Groups 3
1.4 Safety Markings 3
1.5 Nameplate Description 4
1.6 Revision History 5
2. Safety Precaution 7
2.1 Operator Safety 7
2.2 Installation Safety 7
2.3 Electrical Connection Safety 7
2.3.1 PV-side Connection Safety 7
2.3.2 AC-side Connection Safety 7
2.3.3 Battery-side Connection Safety 7
2.3.4 Leakage Current 8
2.4 Operation Safety 8
2.5 Storage Safety 8
3. Product Instruction 10
3.1 Product Overview 10
3.2 Application diagram 10
3.3 Appearance 11
3.4 Dimensions 13
3.5 LCD Operation 13
3.5.1 LCD Function Tree Diagrams 13
3.5.2 LCD home page introduction 15
3.5.3 Description of the main functions 18
3.5.4 Description of the other functions 22
3.6 Operating Modes 23
3.6.1 Self Consumption Mode 24
3.6.2 Schedule Mode 32
3.6.3 Delay charge mode 34
3.6.4 Peak Shaving mode 36
4. Inverter Installation 39
4.1 Pre-receipt inspection 39
4.2 Packing List 39
4.3 Installation Tools 39
4.4 Installation Requirements 40

4.5 Installation steps 42
5. Electrical Connection 44
5.1 Wiring Diagram 44
5.2 Grounding 45
5.3 PV connection 46
5.4 AC, Battery Connection 48
5.5 Communications Connection 51
5.5.1 BMS communication 52
5.5.2 EMS communication 54
5.5.3 CT/Meter Communication 54
5.5.4 DI/DO Communication 61
5.5.5 Module Communication 63
5.5.6 Communication cable wiring procedure 64
6. Commissioning 66
6.1 Local LCD Commissioning 66
6.2 Firmware upgrade and data export 68
6.3 APP Remote Commissioning 69
6.3.1 App Registration and Login 69
6.3.2Inverter Network Configuration 70
6.3.3Adding Devices 72
6.3.4Operating Modes 73
6.3.5Basic safety regulation setting 83
6.3.6View Monitoring Data 84
6.3.7Phase auto-adaptation function enable/disable 87
6.3.8High-impedance mode enable/disable 87
6.3.9 Three-phase unbalanced output enable/disable 88
7. Equipment Maintenance and Handling 89
7.1 Maintenance Precautions 89
7.2 Daily Maintenance 89
7.3 Fault Location and Handling 90
7.4 Equipment handling 95
8. Technical Parameters 97

About APP

Install

Download on the App Store

Download on the Google Play

Operation

*Maximum operating voltage is 600V.

According to the local grid regulation

Can be reached only if PV and battery power is enough

©Dyness reserves the copyright of this document.

Statement of Law

Copyright of this document belongs to Dyness Digital Energy Technology Co., LTD.
No part of this documentation may be excerpted, reproduced, translated annotated or duplicated in any form or by any means without the prior written authorization of Dyness Digital Energy Technology Co.,LTD. All Rights Reserved.
This product complies with the design requirements of environmental protection and personal safety. The storage, use and disposal other products shall be carried out following the product manual, relevant contract or relevant laws and regulations.
Customers can check the related information on the website of Dyness Digital Energy Technology Co., LTD. when the product or technology is updated.

©Dyness reserves the copyright of this document.

1. About the Manual

1.1 Manual Description

This manual is an integral part of the inverter and describes the assembly, installation, commissioning, maintenance and faults of the product. Please read it carefully before operation.

1.2 Applicable Models

This manual applies to three-phase energy storage inverter models:
D5K-HT-A, D6K-HT-A, D8K-HT-A, D10K-HT-A, D12K-HT-A, D15K-HT-A.

1.3 Target Groups

Only for professionals who are familiar with local regulations, standards and electrical systems, and who have been professionally trained and are knowledgeable about this product.

1.4 Safety Markings

Please carefully read and understand the meaning of the following warning signs to facilitate better use of this manual.

Label	Description
	The symbol indicates the danger of electric shock. If not avoided, could result in serious injury or even death to personnel.
	The symbol indicates some precautions. If not avoided, could result minor injuries to personnel or damage to the inverter
	The symbol indicates that the surface temperature is high. Please do not touch it.
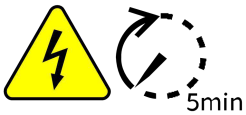	Delayed discharge, and the maintenance personnel must wait for 5 minutes before they are completely powered off.
	Please read through the user manual before any operations.
	Please do not dispose of the inverter as household waste. Discard the product in compliance with local laws and regulations, or send it back to the manufacturer.
	CE mark of conformity.
	Grounding mark.

©Dyness reserves the copyright of this document.

1.5 Nameplate Description

- This diagram illustrates only the layout and markings of the nameplate. Electrical rated parameters vary by model. Refer to the physical nameplate on the unit and the specification section of this manual for exact values.
- To locate the S/N serial number, check the serial label affixed to the S/N field on the nameplate.

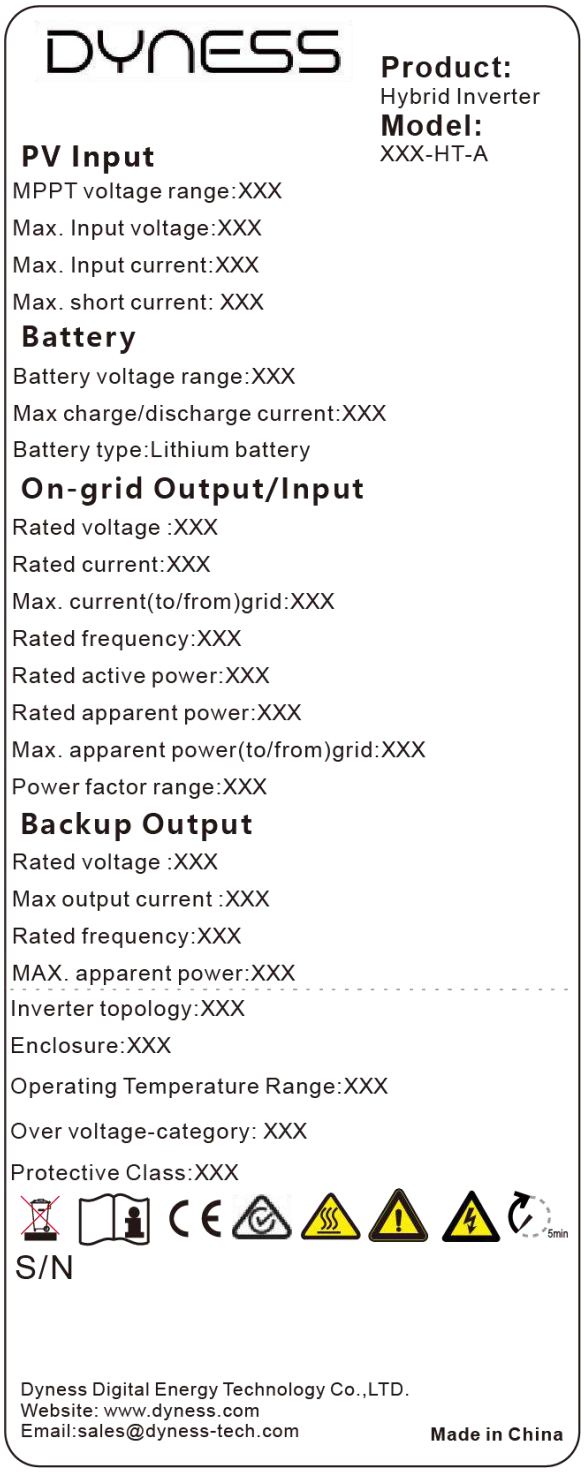

©Dyness reserves the copyright of this document.

1.6 Revision History

Version	Date	Description
V6.0	2026.11.24	Added nameplate schematic diagram in Section 1.5 Nameplate Description.
V5.0	2026.11.5	Added leakage current description in Section 2.3.4 leakage current.
v4.0	2026.9.11	• Added storage temperature, humidity and condensation requirements in Section 2.5 Storage Safety. • Updated the LCD function tree diagrams in Section 3.5.1 LCD Function Tree Diagrams. • Updated all screen-related images throughout the manual due to product display screen design changes. • Updated the expressions of inverter operating modes throughout the manual. • Added operation instructions for enabling EPS mode in Section 3.5.3 Description of the main functions. • Specified that the electricity meter is an optional accessory and shall be purchased independently by users in Section 4.2 Packing List. • Added safety warning for verifying zero-voltage after power-off in Section 5.1 Wiring Diagram. • Revised the screwdriver specification for grounding operation and added recommended tightening torque in Section 5.2 Grounding. • Revised the screwdriver name in Section 5.4 BAT Connection. • Replaced external meter schematic diagram in Section 5.5.3.2 External meter. • Added safety warning requiring a 5-minute waiting period for internal capacitor discharge after power-off in Section 6.1 Local LCD Commissioning. • Modified the identifiable folder name for USB upgrade in Section 6.2 Firmware upgrade and data export. • Added Section 6.3 APP Remote Commissioning. • Added troubleshooting operation guidelines for Grid voltage fault in Section 7.3 Fault Location and Handling. • Added clear recovery procedure for The GFCI device fault in Section 7.3 Fault Location and Handling. • Modified the range of relative humidity in Section 8. Technical Parameters. • Optimized text expressions throughout the manual, corrected grammatical errors and optimized illustrations.
V3.0	2026.7.24	Updated the surge protection data in “8 Technical Parameters”.
V2.0	2026.6.12	• Updated the power range description for the non-configured external fan cover in "3.3 Appearance".

©Dyness reserves the copyright of this document.

		• Revised the button descriptions in “3.3 Appearance”. • Updated the LCD function tree diagram in “3.5.1 LCD Function Tree Diagrams”. • Updated the “Grid Feed Limit”interface throughout the manual. • Added content related to CEI autotest in "3.5.4 Description of Other Functions". • Added the power control accuracy specification for Zero Export mode in “3.6.1.1 Mode Parameter”. • Added content related to Peak Shaving mode in “3.6.4 Peak Shaving Mode”. • Added content related to Ramadah mode in “3.6.5 Ramadah mode”. • Updated the meter carton information in “4.2 Packing List”. • Revised the applicable power range of grounding cables for HT-A series models in “5.2 Grounding”. • Added the HT-A 5kW model specifications to the battery and AC cable / circuit breaker recommendations in “5.4 AC, Battery Connection”. • Revised the external meter connection schematic in “5.5.3.2 "External meters”.
V1.0	2026.4.24	Initial Release

©Dyness reserves the copyright of this document.

2. Safety Precaution

2.1 Operator Safety

Personnel installing or servicing the equipment must be highly trained and should be aware of safety precautions and proper operation.

2.2 Installation Safety

	1. Ensure that the equipment is not connected to any electrical connections before installation. 2. When drilling holes in the installation wall ensure to avoid the water and electricity lines in the wall.

	1. During transportation, pay attention to the weight of the product and keep it balanced to avoid falling and hurting the human body. 2. The tools used must be checked prior to installation for compliance with professional requirements.

2.3 Electrical Connection Safety

2.3.1 PV-side Connection Safety

	1. Use the PV input terminals included in the accessory package to connect the DC cables on the PV side. 2. Use a multimeter to check the polarity of the DC cables to ensure that the polarity is correctly connected, otherwise it may lead to equipment damage or personal injury or death. 3. A PV string cannot be connected to more than one inverter. Otherwise, it may lead to equipment damage or personal injury 4. PV±poles to earth cannot be short-circuited, the impedance to ground should be > Vpv/30mA.

2.3.2 AC-side Connection Safety

	1. Use the cable connection AC terminals included in the accessory package. 2. It is recommended to use copper wire for the AC output cable. 3. It is recommended to install protective devices such as earth leakage protector and fuse on the AC side. The size of the protection device should be at least 1.25 times the rated AC output current.

2.3.3 Battery-side Connection Safety

	1. Use the cable connection BAT±terminals included in the accessory package. 2. It is recommended to use copper wire for the battery cable. 3. The batteries used with the inverter should be permitted by the inverter manufacturer.

©Dyness reserves the copyright of this document.

	4. Do not connect a battery to more than one inverter at the same time, otherwise it may lead to equipment damage. 5. Use a multimeter to check the polarity of the DC cables to ensure that the polarity is connected correctly, otherwise it may lead to equipment damage or personal injury or death.

2.3.4 Leakage Current

	The inverter has a built-in residual current monitoring unit (RCMU). In tests conducted in accordance with IEC 62109-2:2011, the measured DC component of the residual current on the AC side was less than 6 mA. Select and install external residual current devices (RCDs) in accordance with local wiring regulations. 1. On-grid side: The inverter is compatible with Type A RCDs. If an external RCD is required on the grid side, Dyness recommends a rated residual operating current of at least 100 mA. 2. Backup side: If an external RCD is required on the backup side, Dyness recommends a rated residual operating current of at least 100 mA. If a backup load circuit requires 30 mA additional protection under local wiring regulations, install a 30 mA RCD on that circuit.

2.4 Operation Safety

Any operation on the inverter must be carried out by specialized personnel. While the device is in operation:

	3. Do not touch the inverter case during operation. 4. Do not unplug any connector of the inverter. 5. It is strictly prohibited to touch any terminals of the inverter. 6. It is strictly prohibited to disassemble any parts of the inverter. 7. It is strictly prohibited to operate the peripheral equipment equipped with the inverter, such as DC switch, etc.

2.5 Storage Safety

If the inverter is not installed immediately, it needs to be stored according to the following requirements:

	1. Keep the inverter in the original packing box and store it in a relatively dry place 2. The box should be kept upright and stacked according to the direction of the box tips 3. Do not store the inverter in harsh environments such as direct light and rain. 4. Do not store the inverter in a place where it may be damaged. 5. Please check the inverter and its packaging regularly. 6. Storage ambient requirements: Temperature -30℃ to 70℃, relative humidity 0% to 95%. Condensation is strictly prohibited.

©Dyness reserves the copyright of this document.

3. Product Instruction

3.1 Product Overview

This product is a hybrid inverter that converts solar energy into AC power for load consumption, stores the energy in batteries for future use or feeds it into the utility grid. The working mode of the inverter depends on the user's settings, the inverter can be used to provide emergency power in the event of a power outage.

3.2 Application diagram

- System Diagram

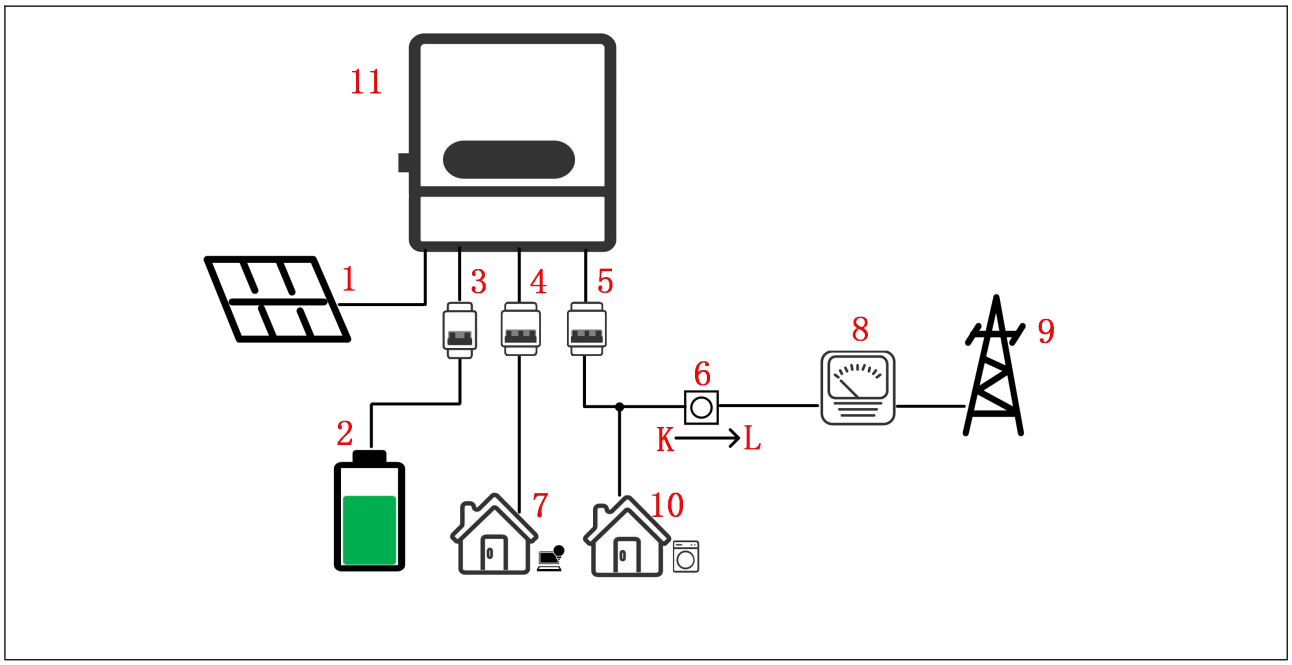

- System Instruction

1	Solar panel	A PV string consists of PV panels connected in series
2	Battery system	Inverter-supported batteries can be selected for matching
3	Battery DC circuit breaker (Optional)	Self-contained battery-side DC circuit breaker, rated current needs to be ≥ 50A, rated voltage needs to be ≥ 750V (If the battery has integrated battery circuit breaker, optional installation according to local regulations)
4	Backup AC circuit breaker	Self-provided Backup side AC circuit breaker, rated current depends on the load and the maximum current of the inverter, recommended > 1.25 times the maximum current; rated voltage ≥ 230Vac
5	grid AC circuit breaker	Self-provided On-grid AC circuit breaker, rated current depends on the load and the maximum current of the inverter, recommended > 1.25 times the maximum current; rated voltage ≥ 230Vac
6	CT	The accessory package will come with the CT, which must be connected to the grid in the direction of the CT K→L.
7	Backup	Critical loads can be connected here, and if equipped with batteries, the loads will not be disconnected in case of grid failure.
8	Meter	Selection of meter according to local requirements
9	Utility grid	Supported Grid Types 3L/N/PE,220/380,230/400

©Dyness reserves the copyright of this document.

10	On-grid loads	Other loads can be connected here, and if the grid is disconnected, the loads will also be disconnected.
11	Inverter	HT-A 5~15K

NOTE: When the inverter is off-grid, the precautions are as follows:

1. If the system is not equipped with batteries, it is not recommended to use the Backup function, otherwise it may cause the system power failure.
2. The load connected to the Backup needs to consider the inductive and capacitive load startup and switching inrush power/current, the inrush current should be <2 times the rated current.
3. Backup is not allowed to connect isolation transformer, and not allowed the load to be connected behind the autotransformer.
4. Backup is not allowed to connect the equipment that needs to rely on a stable power supply, such as equipment used for life-sustaining medical equipment or bank data servers and other equipment, to avoid personal injury or property damage caused by abnormal power outages.

3.3 Appearance

- Product Appearance

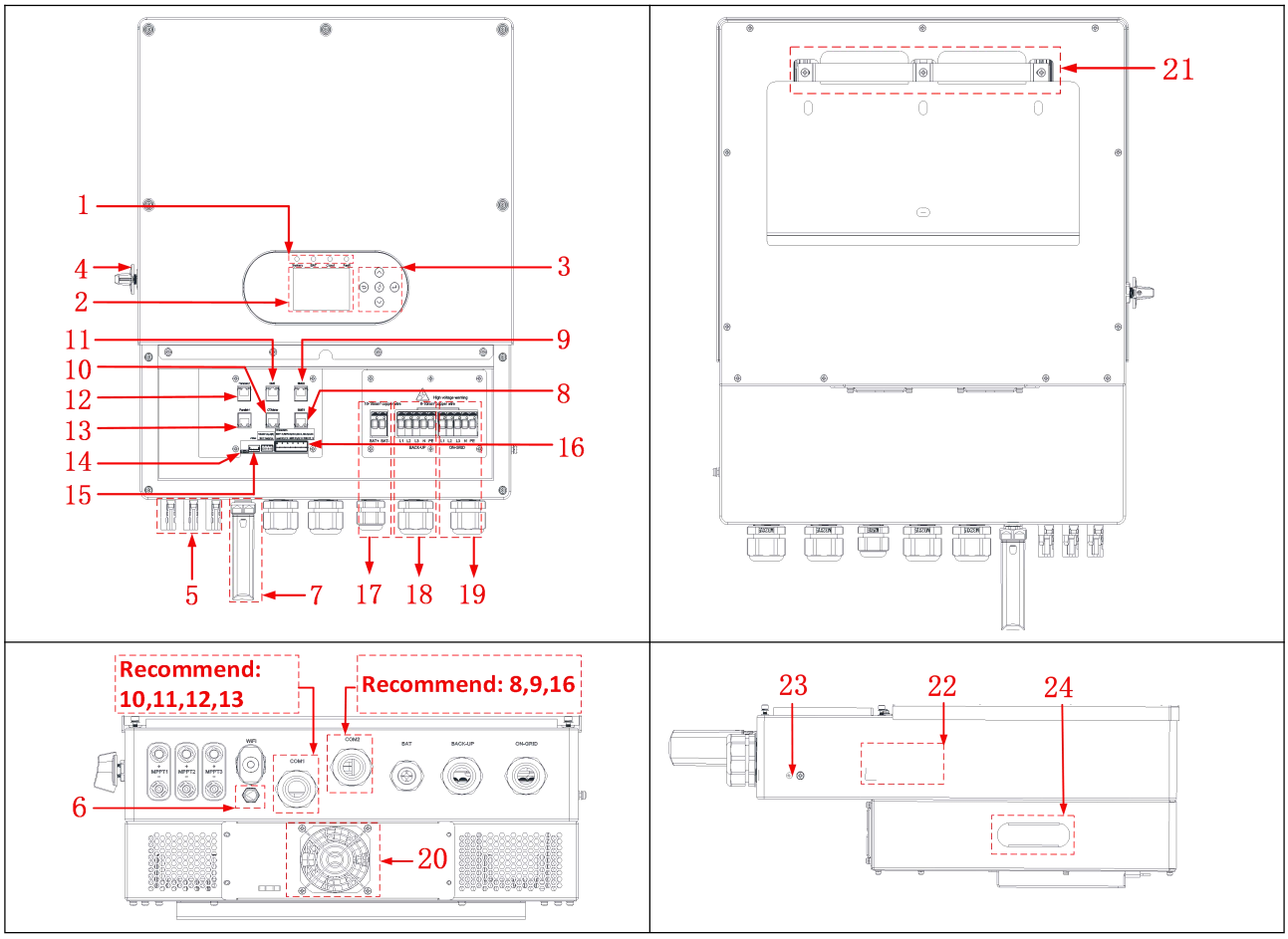

- Functional Description

1：Inverter Indicator Light	2：Touch LCD display
3：Function buttons	4：PV Switch
5：PV input（2/3MPPT）	6：Pressure relief valve
7：Communication Modules	8：BMS1 connector

©Dyness reserves the copyright of this document.

9：BMS2 connector (Reserved)	10：CT/Meter connector
11：EMS connector	12：Parallel connector
13：Parallel connector	14：Dip switch
15：USB flash drive interface	16：DI/DO connector
17：Battery connector	18：Backup connector
19：On-grid connector	20：External Fan Cover (HT-A 5~8K none)
21：Hanging bar	22：Parameter label
23：Ground terminal	24：Mounting handle

- Indicator Description

No.	Define	Colour	Turn off	Single flash	Double flash	Ever Bright
1	System	Green	Standby/Failure/Upgrade	Off-grid	Self-check	On-grid
2	BAT	Green	Battery not connected	BMS NG	/	Normal
3	Cloud	Green	WiFi Module not recognized	Not connected to router	Not connected to cloud	Normal
4	Fault	Red	Normal	Backup overload	/	Fault

- Button Description

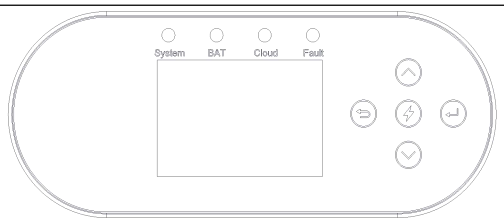

⮌	ESC
↵	Enter
∧	Page up
ϟ	Reserved
∨	Page down

- PV Switch

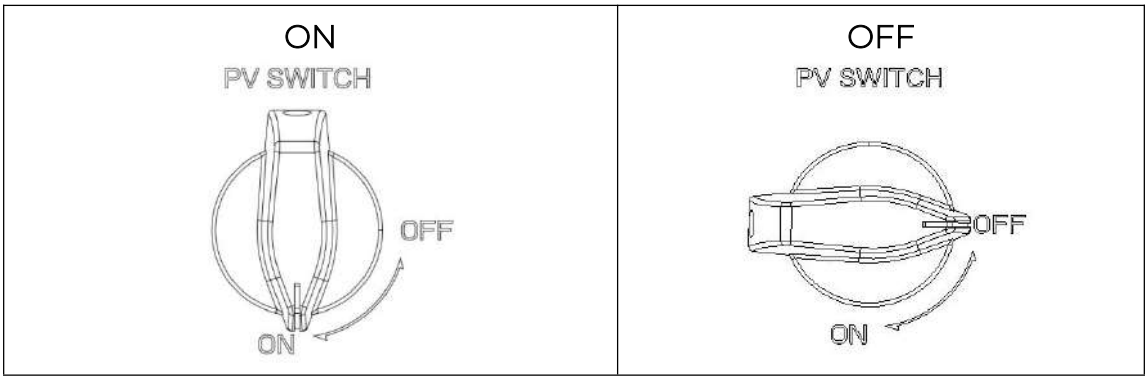

©Dyness reserves the copyright of this document.

3.4 Dimensions

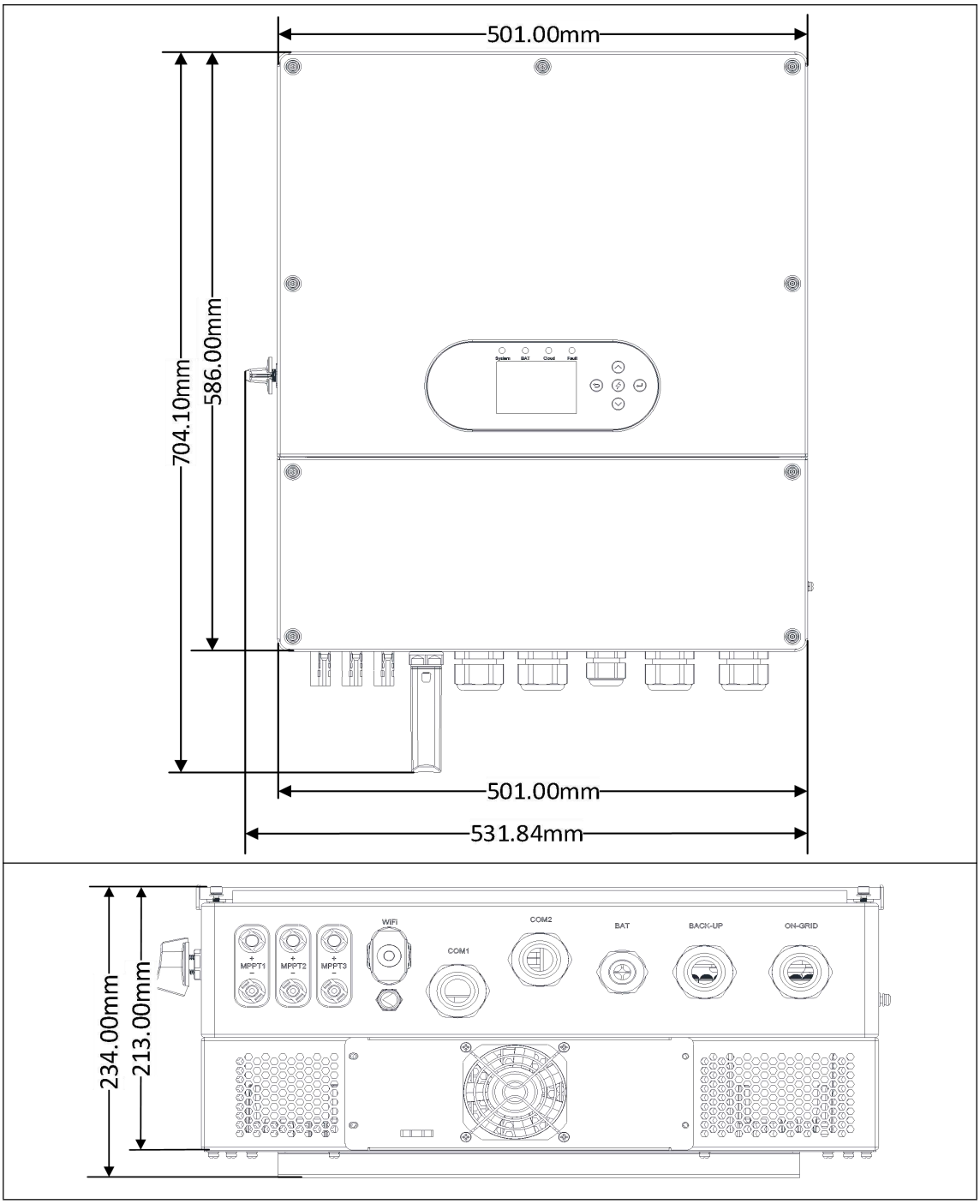

3.5 LCD Operation

3.5.1 LCD Function Tree Diagrams

- The LCD function tree diagram is as follows, users can operate the LCD screen according to this tree diagram.

©Dyness reserves the copyright of this document.

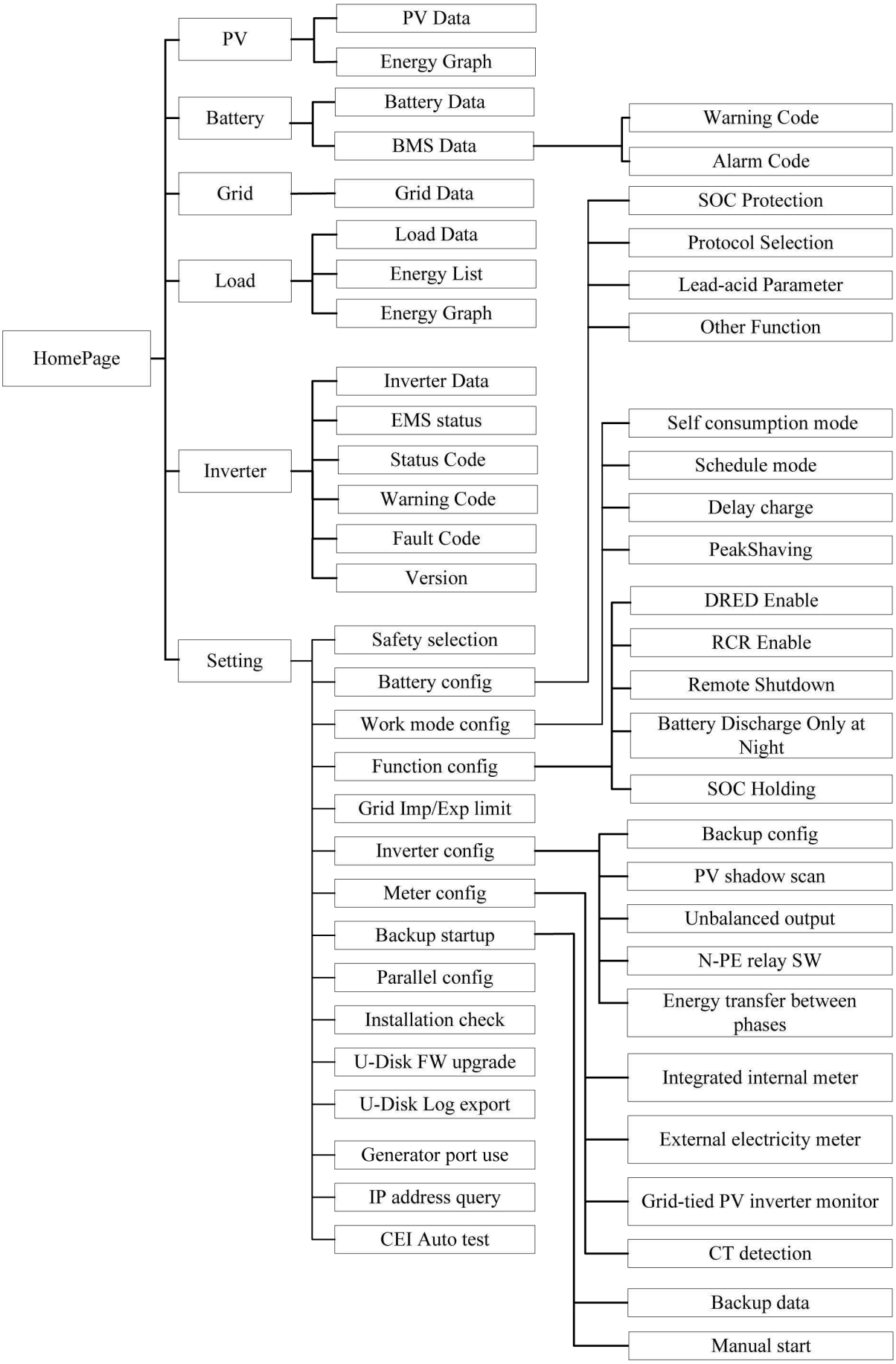

©Dyness reserves the copyright of this document.

3.5.2 LCD home page introduction

The picture of the LCD homepage is as follows. Users can click on the icon to enter the relevant interface and obtain information about the inverter.

1. Solar data

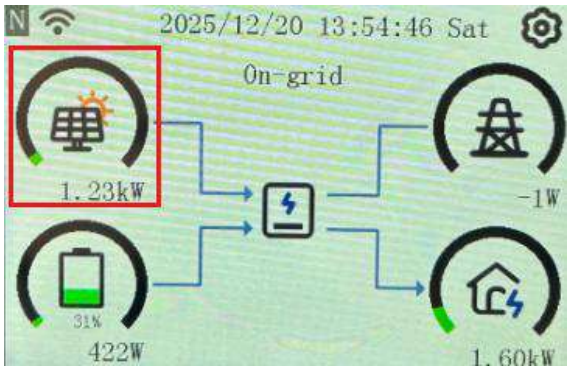

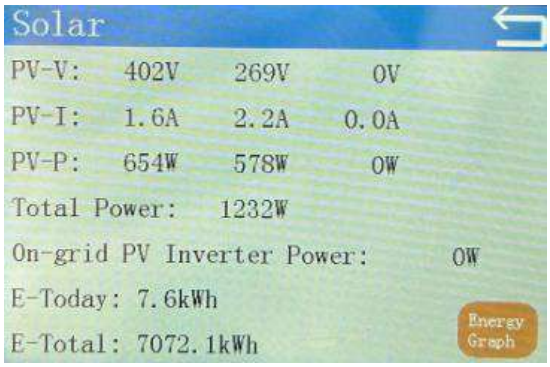

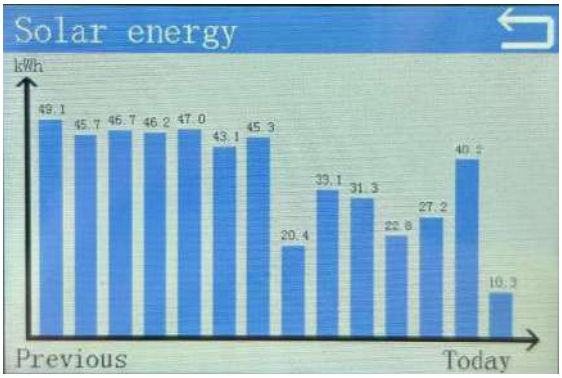

2. Battery data

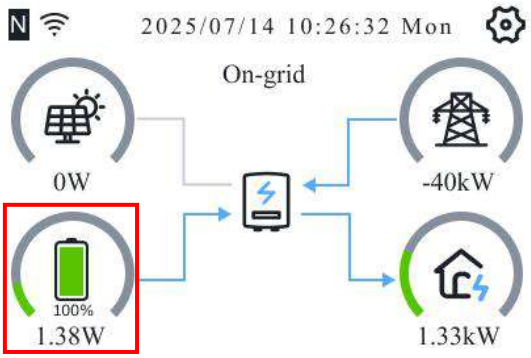

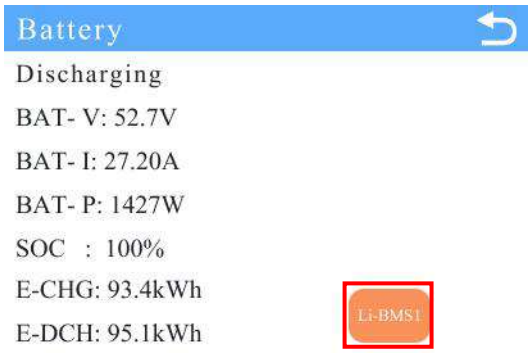

©Dyness reserves the copyright of this document.

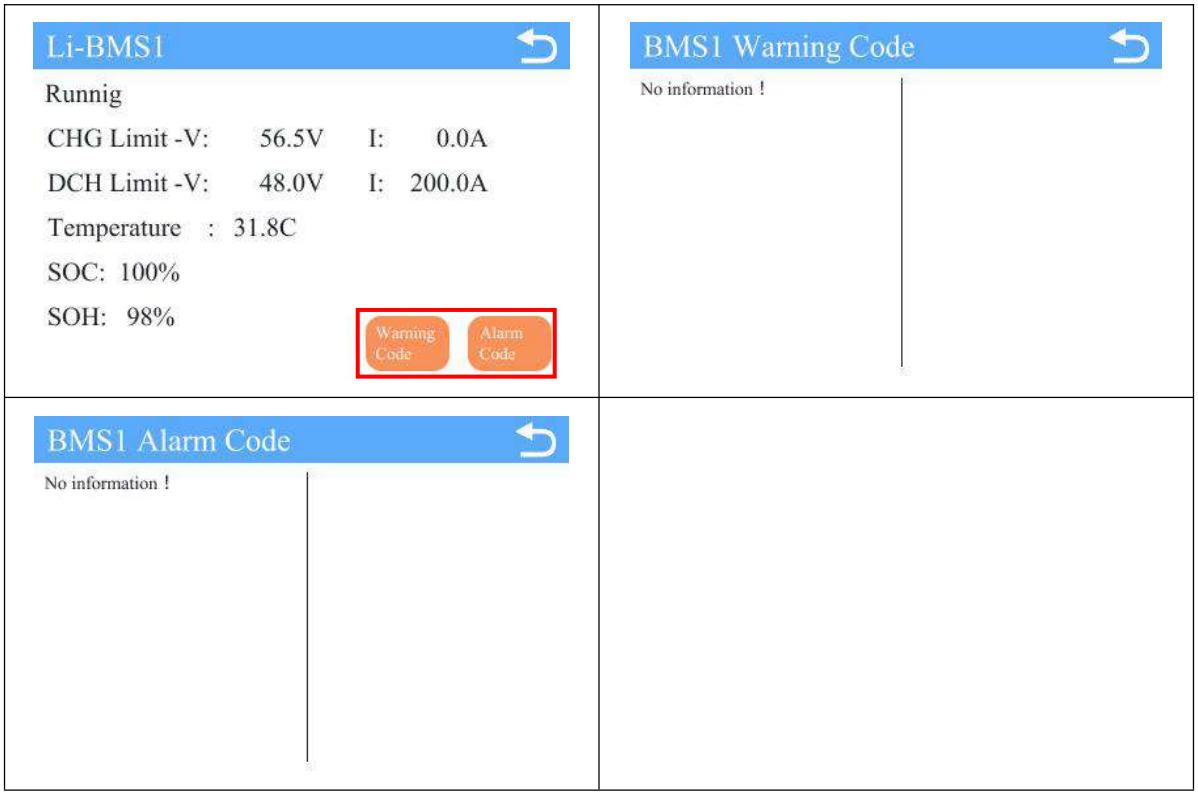

3. Inverter data

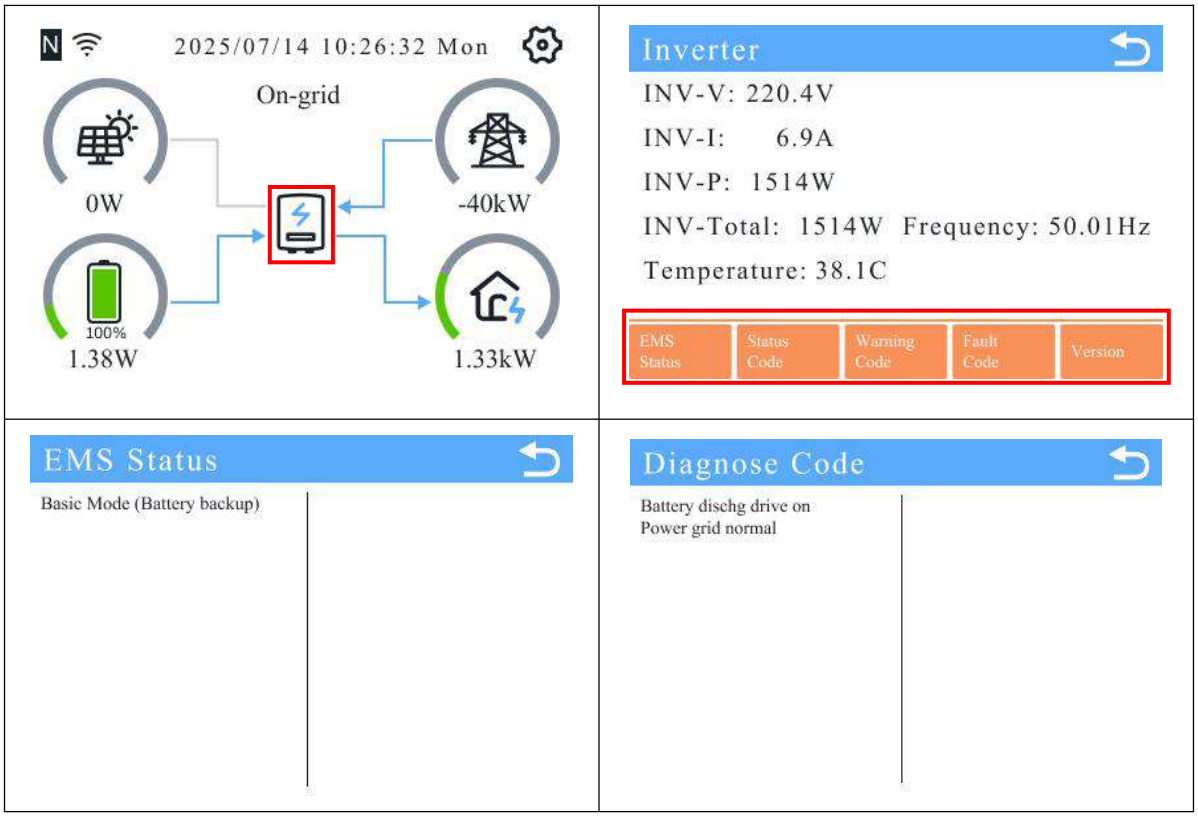

©Dyness reserves the copyright of this document.

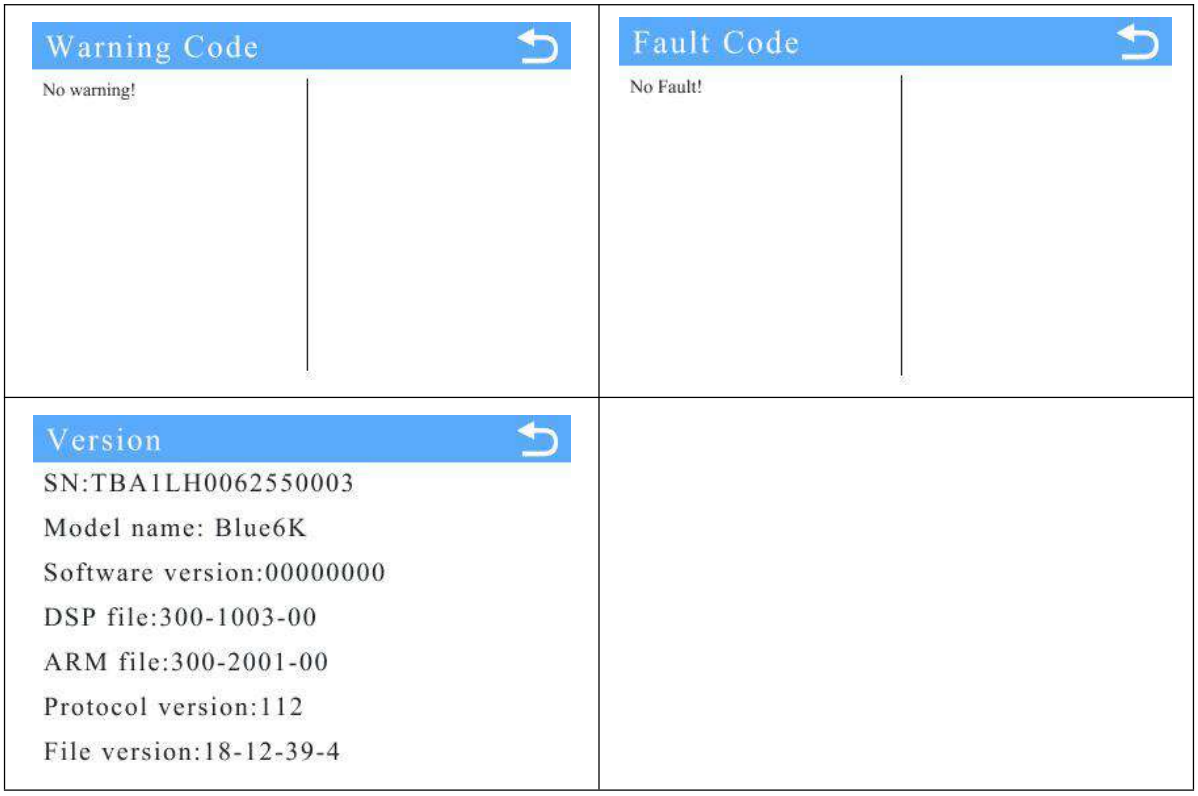

4. Grid data

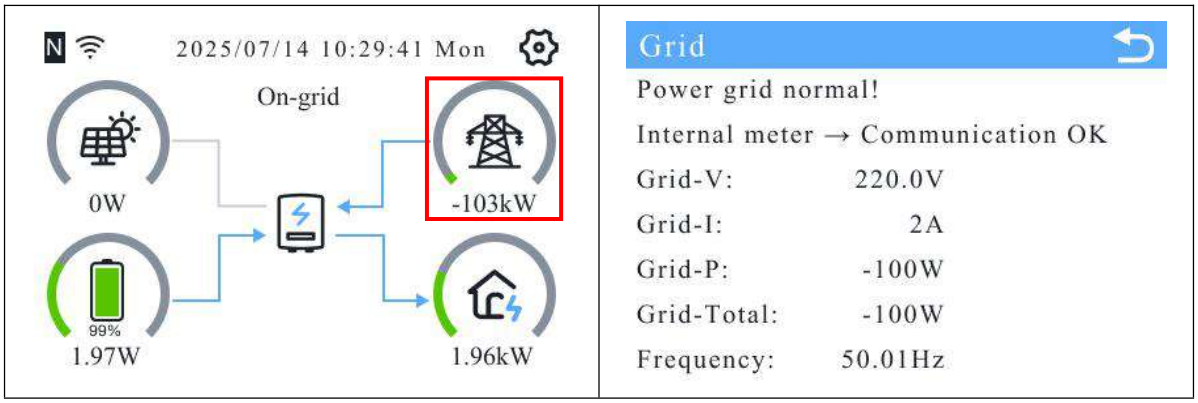

5. Load data

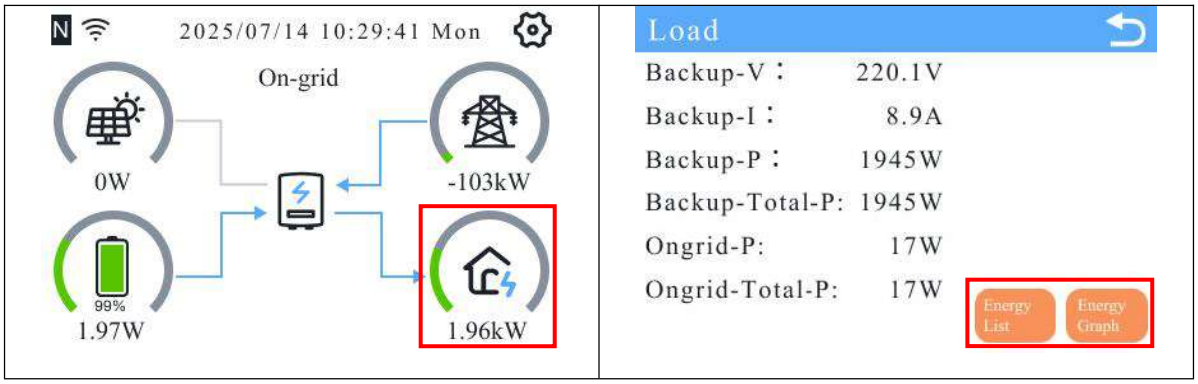

©Dyness reserves the copyright of this document.

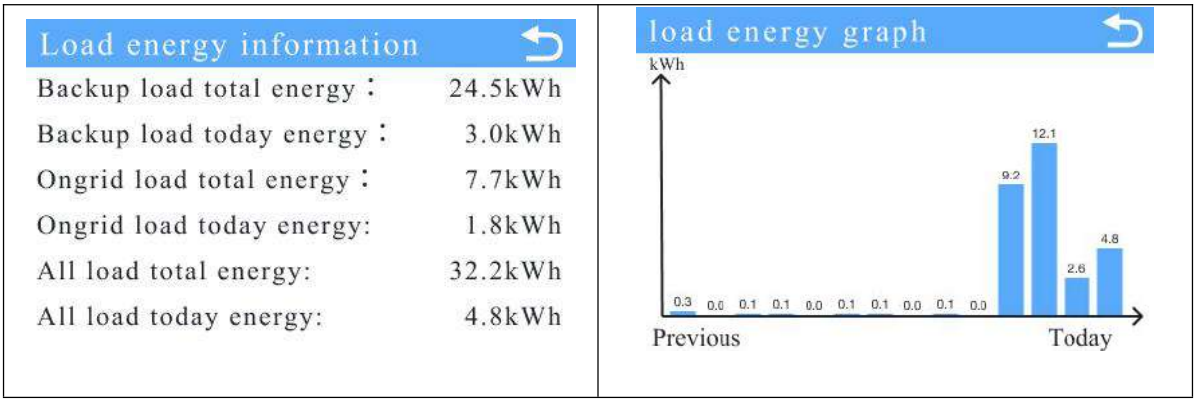

3.5.3 Description of the main functions

- Battery SOC holding function

The battery SOC holding function only works in grid-connected mode. After the battery is discharged to the SOC protection value, if the battery SOC is lower than the protection value due to standby power consumption, the inverter will automatically buy power from the grid to replenish the battery, so that the battery SOC is always kept at the protection value. The operation steps are as follows:



- Grid Imp/Exp Limit

©Dyness reserves the copyright of this document.

In self-use mode, the regular state will eventually control the power of the meter at 0 W. Some users prefer the demand control target to buy power from the grid or sell power to the grid, which is supported by the inverter, and the target value can be set. The operation steps are as follows:

Step1

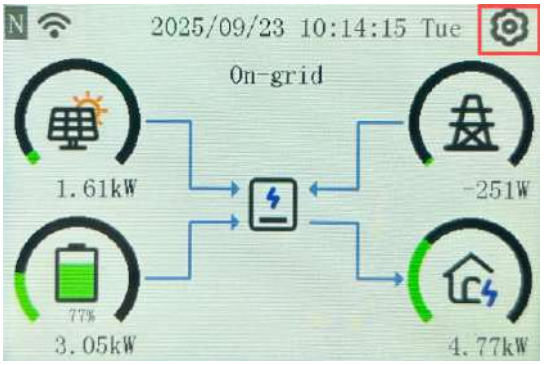

Step2

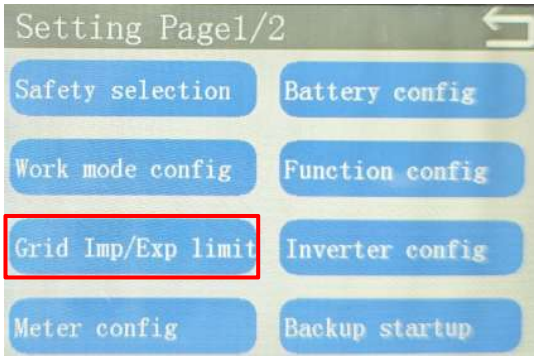

Step3

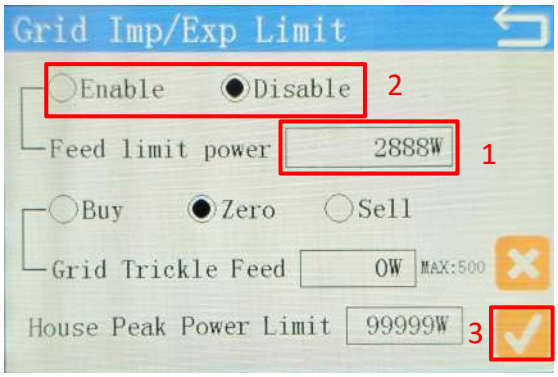

1. Setting “Feed limit power”
2. Click enable/disable
3. Click “√”

Step4

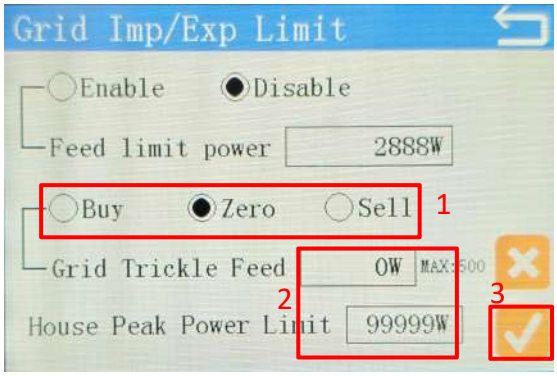

1. Click “Buy/Zero/Sell”
2. Setting parameters
3. Click “√”

- Three-phase unbalanced output function

This function is applied to the scenario of three-phase load imbalance. For example, when the inverter can output 8kW power, L1 phase has 2kW load while L2 and L3 have no load, the inverter outputs 4kW to L1 phase and 2kW to L2 and L3 respectively. This function realizes the balanced output to the grid, and for the use of three-phase separate billing scenarios, it maximizes the user's benefit. The operation steps are as follows:

Note: The premise of realizing this function is that the power of PV + battery > load power.

©Dyness reserves the copyright of this document.

Step1

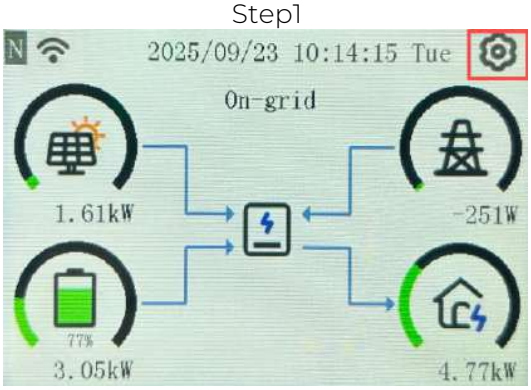

Step2

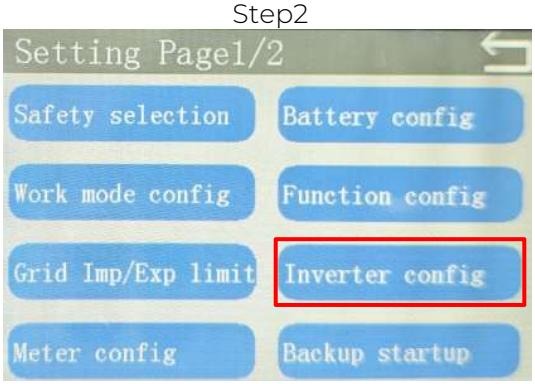

Step3

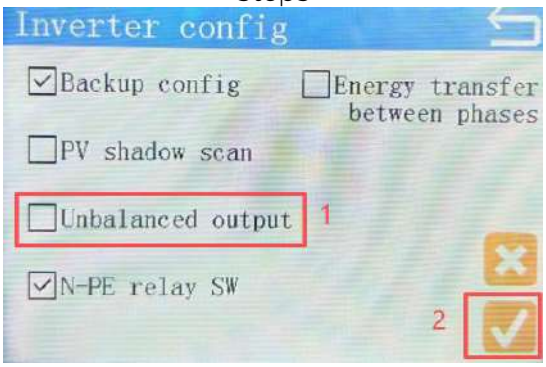

Step4

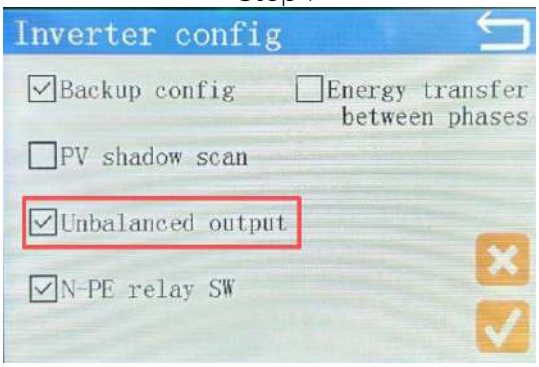

1. Click “Unbalance output”
2. Click “√”

- Energy transfer between phases function

This function is applied to the scenario of three-phase voltage imbalance in the power grid. For example, when the grid L1 phase voltage is high, L2 voltage is low and L3 voltage is normal, turn on this function to dynamically adjust the output power of each phase to stabilize the grid voltage.

Note: This function must be turned on at the same time as the three-phase unbalanced output function to be effective. The operation steps are as follows:

Step1

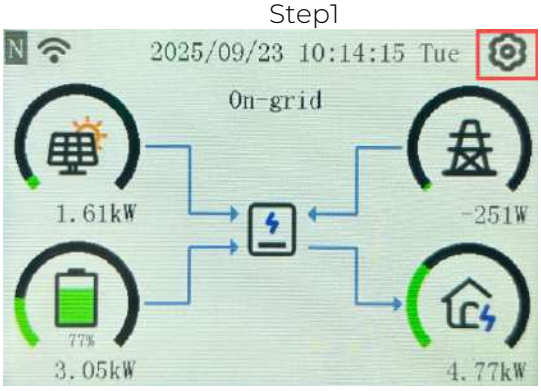

Step2

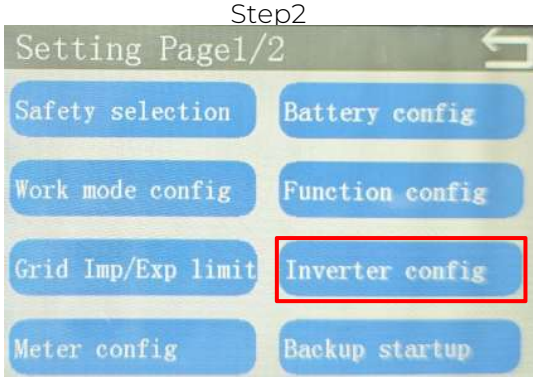

Step3

Step4

©Dyness reserves the copyright of this document.

<table>
<tr>
<td>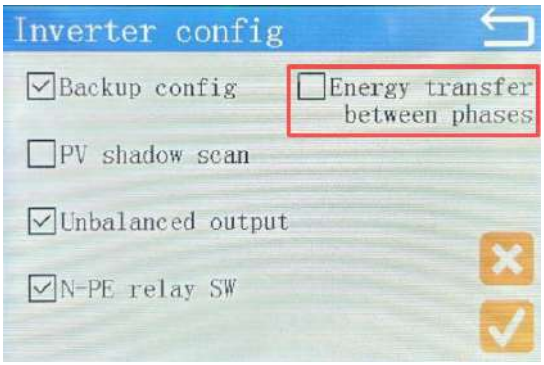
</td>
<td>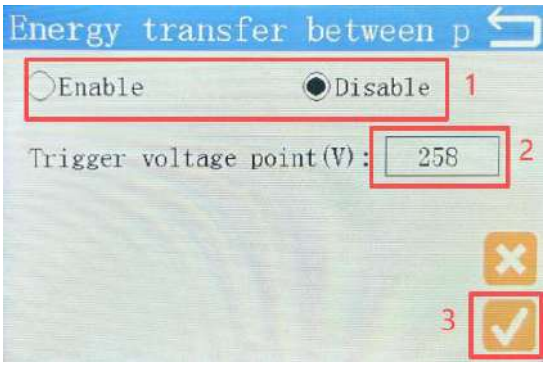

1. Click “Enable/Disable”
2. Setting the trigger voltage
3. Click “√””</td>
</tr>
<tr>
<td>Step5
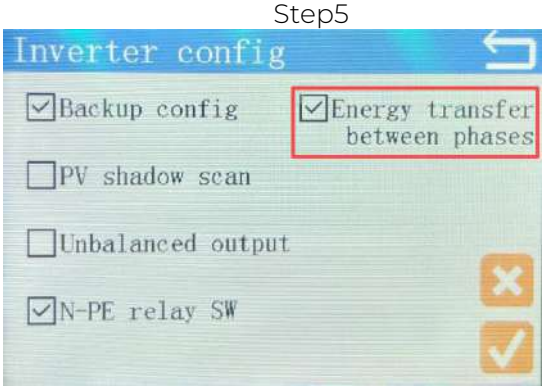
</td>
<td></td>
</tr>
</table>

- Manual start BACK-UP

To manual start BACK-UP function, follow the steps below.

<table>
<tr>
<td>Step1
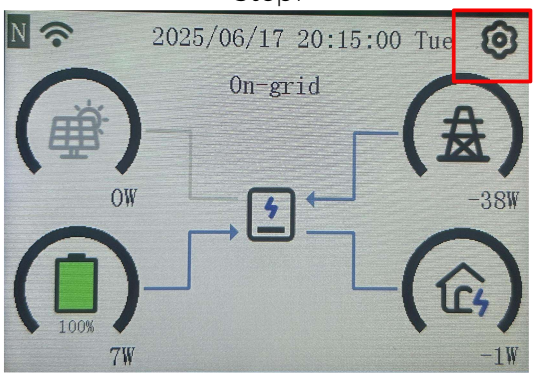
</td>
<td>Step2
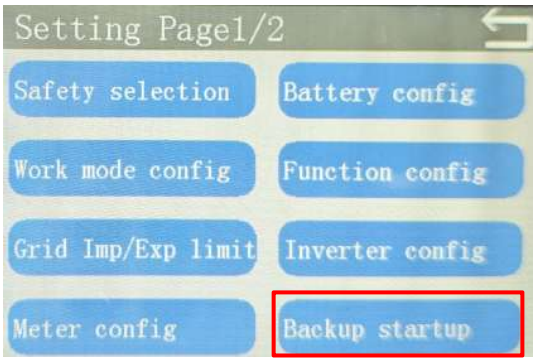
</td>
</tr>
<tr>
<td>Step3</td>
<td></td>
</tr>
</table>

©Dyness reserves the copyright of this document.

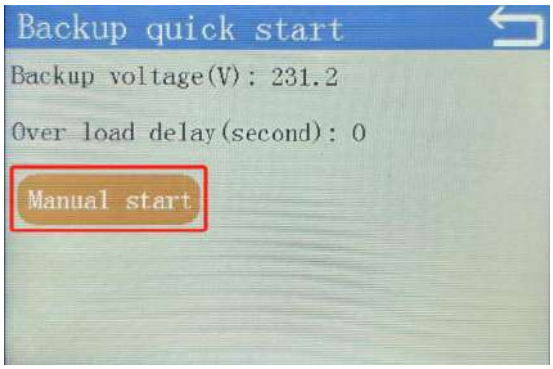

- Enable EPS Mode

Step1

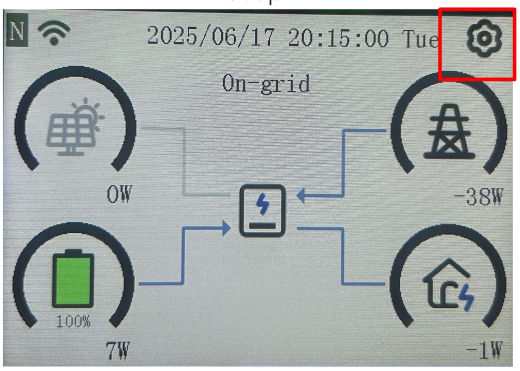

Step2

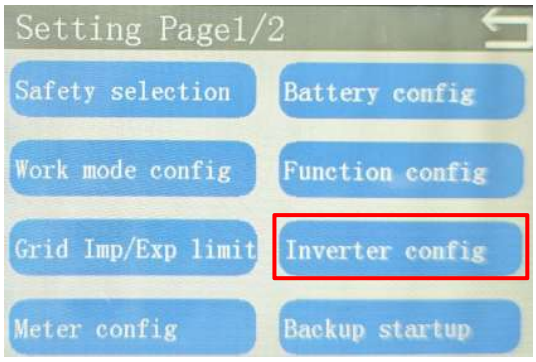

Step3

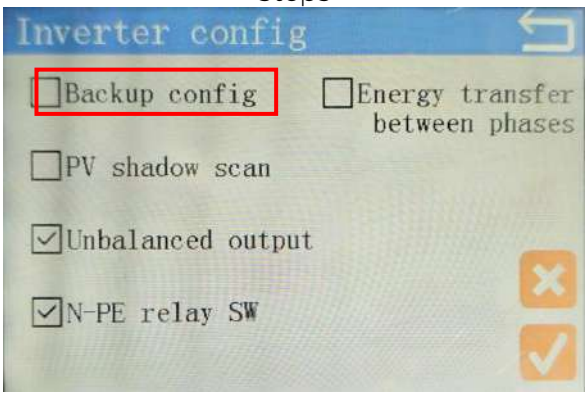

Step4

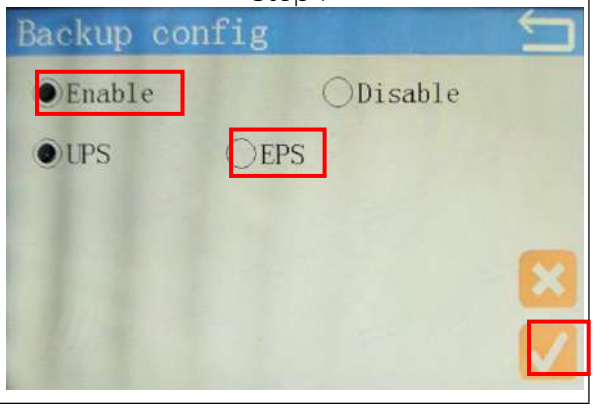

3.5.4 Description of the other functions

- If the user selects the Italian safety standard, the “CEI Auto test” function is required according to the "CEI 0-21 standard". The operation steps are as follows

©Dyness reserves the copyright of this document.

<table>
<tr><td>Step1
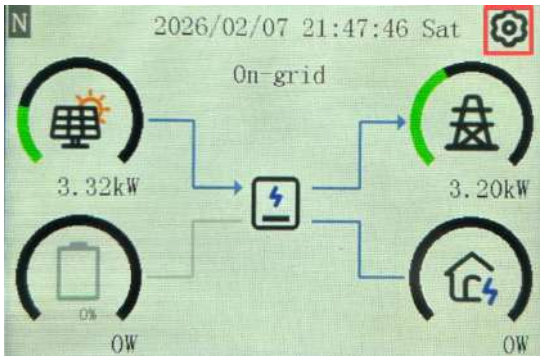
</td><td>Step2
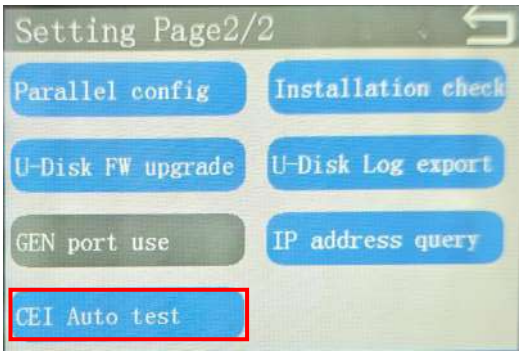
</td></tr>
<tr><td>Step3
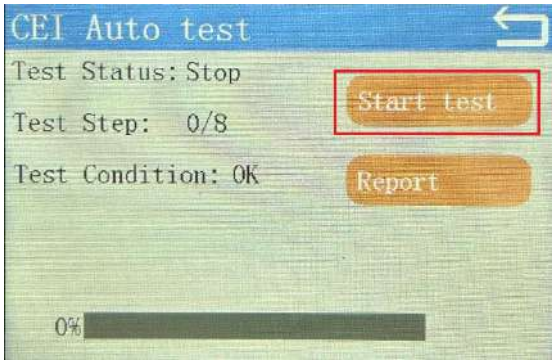
</td><td>Step5
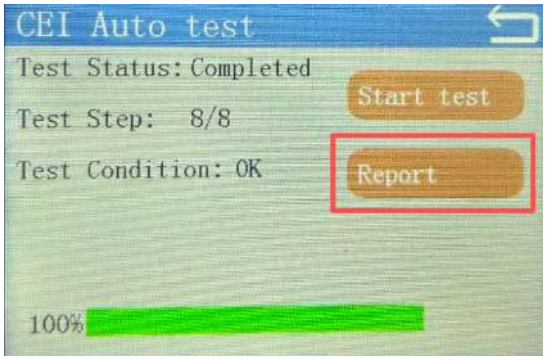
</td></tr>
<tr><td>Step6: Auto test Report page1
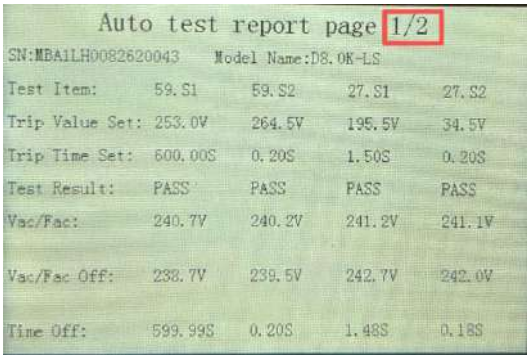
</td><td>Step7:Auto test Report page2
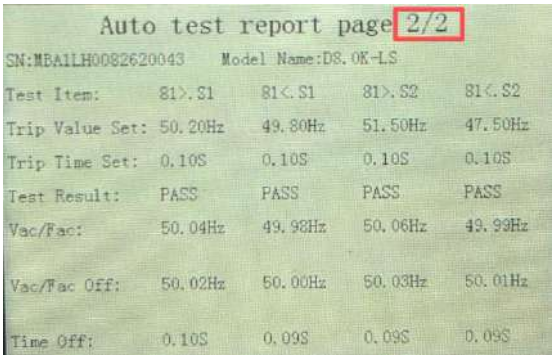
</td></tr>
</table>

3.6 Operating Modes

The inverter has 4 **working modes:** self consumption mode, schedule mode, delay charge mode, peakshaving mode. The factory default setting is in the self consumption mode.

©Dyness reserves the copyright of this document.

Step1	Step2
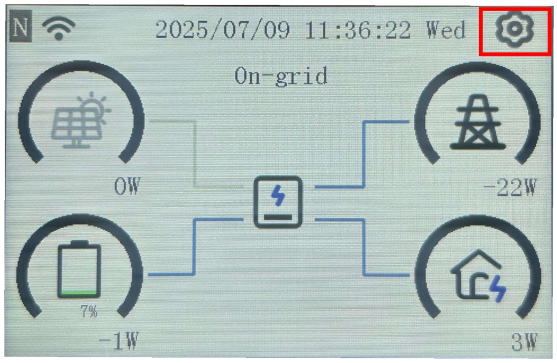	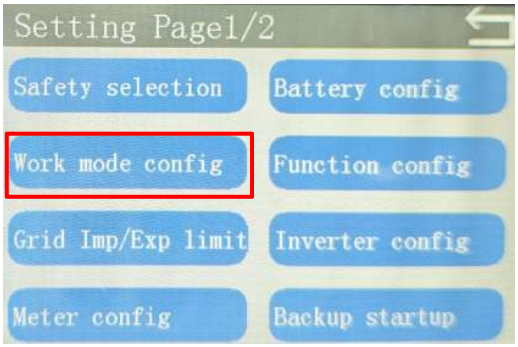
Step3	
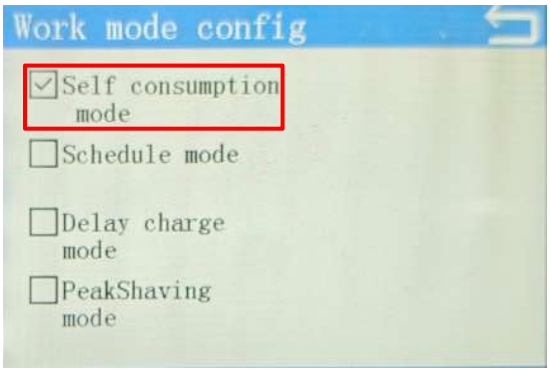	

3.6.1 Self Consumption Mode

- The self consumption mode interface has 5 sub-options, as shown in the following picture. Which can be set by the user according to their actual needs. The following is the detailed explanation.

Step1	Step2
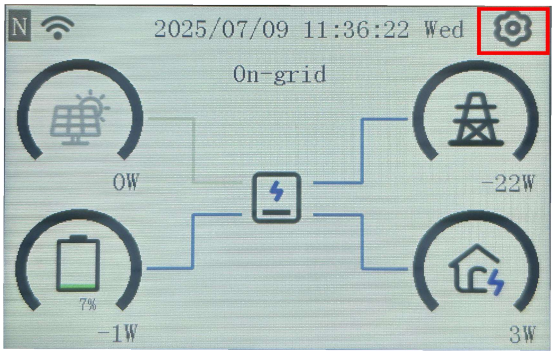	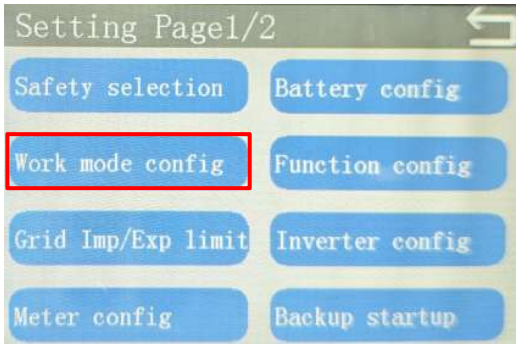

©Dyness reserves the copyright of this document.

Step3	Step4
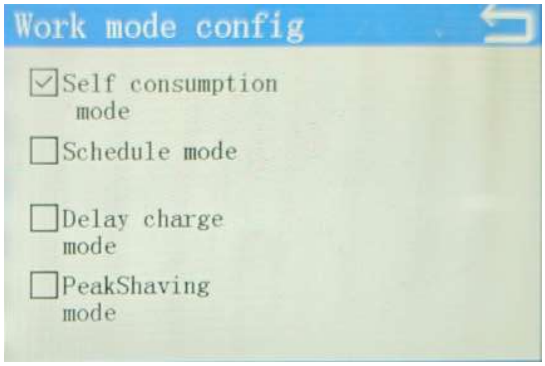	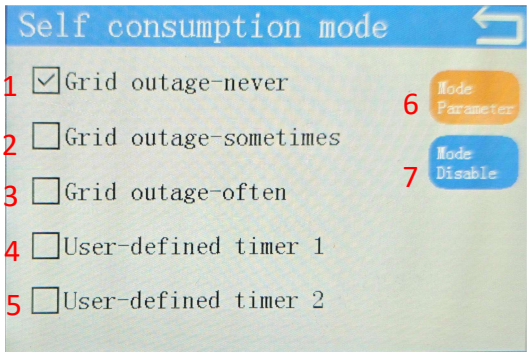

- Detailed explanation

No.	Option Name	Explanation
1	Grid outage-never	**Applicable to areas with stable grid and almost no power outage.** PV energy prioritizes powering the load; excess energy is used to charge the battery. When PV energy is insufficient, the battery discharges to replenish the energy supply.
2	Grid outage-sometimes	**Applicable to areas where grid sometimes outages.** By default, 50% of the Battery SOC is reserved for BACK-UP during grid outages. Users can also adjust this ratio and the maximum charging power of the grid. When ON-GRID, the energy from PV and grid are prioritized to ensure that the Battery SOC is not lower than 50%. On this basis, PV supplies power to the load first, and the remaining power is used to charge the battery. The battery can also discharge to replenish power. **Note:** If the maximum charging power of the grid is set to 0, it is equivalent to only using PV to charge the battery.
3	Grid outage-often	**Applicable to areas where grid often outages.** By default, 100% of the Battery SOC is reserved for BACK-UP during grid outages. Users can also adjust this ratio and the maximum charging power of the grid. When ON-GRID, the energy from PV and grid are prioritized to ensure that the Battery SOC reaches 100%. The battery only discharges when the Grid outages. **Note:** If the maximum charging power of the grid is set to 0, it is equivalent to only using PV to charge the battery.
4	User-defined	User-defined timer 1 allows for the configuration of 6 different time

©Dyness reserves the copyright of this document.

	timer1	periods to set the Battery SOC retention status during specific period of time. The parameters on the settings are explained below.
5	User-defined timer2	User-defined timer 2 allows for the configuration of 6 different time periods to set the Battery SOC retention status during specific period of time. The parameters on the settings are explained below.
6	Mode Parameter	Configure some parameters in this mode, including energy priority settings, grid feed-in settings, grid purchase electricity limit, etc. The parameters on the setting page are explained below.
7	Mode Disable	Disable this mode.

3.6.1.1 "Mode Parameter" specification

- "The Mode Parameter" interface is as shown in the following figure.

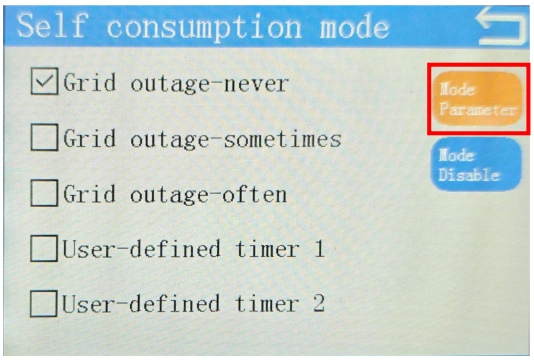

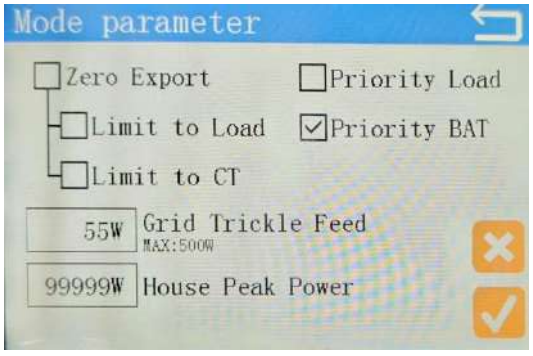

- Explanation of "Mode Parameter"

1. **Zero Export**: The feeding power to grid will be controlled to zero. The accuracy is 1%.
2. **Limit to Load**: The system will prioritize supplying BACK-UP loads. When the PV energy is greater than the charging battery and BACK-UP loads, the system can supply power to ON-GRID loads, but it will not sell electricity to the grid.
3. **Limit to CT**: The system will prioritize supplying BACK-UP loads and ON-GRID loads.
4. **Priority Load**: The PV energy is prioritized for supplying power to the load, and the remaining energy is used to charge the battery.
5. **Priority BAT**: PV energy is prioritized to charge the battery (default setting). When the battery is fully charged or there is excess PV energy, PV energy will supply power to the load.
6. **Grid Trickle Feed**: The power flowing from the grid to the inverter. Set this value to "20-100W" to instruct the inverter to always take the prescribed amount of power from the grid to minimise the tripping of sensitive pre-paid electricity meters if "Reverse Power Detection" occurs.
7. **Grid Peak Shaving**: Set a peak power limit for household electricity usage. This is used to prevent "inverter charging" and "total household load power" exceed "the maximum carrying capacity of the breaker in the household distribution box". This may result in "breaker tripping" or "line overheating damage". Generally, a 63A breaker can be set to 13kW; when the electricity

©Dyness reserves the copyright of this document.

usage exceeds the set value, the inverter will actively reduce the charging power until it reaches 0. (Active discharge is not currently supported.)

8. "√"：Button for confirming parameter changes. After modifying the setting values, you must click the "√" button for the changes to take effect.
9. "×"：Button for canceling parameter changes. After clicking the "×" button, the current parameter modification can be cleared.

3.6.1.2 "Grid outage-never" specification

- When "Grid outage-never" is selected, the inverter operates in the default mode. The description of this mode is as follows: (We also call it Self-use mode). The Self-use mode suitable for areas with high electricity prices and low subsidies for solar power. PV energy destination priority: load > battery > grid

1. Day:When the PV system produces enough energy, it will be provided to the load first. Excess energy is first charged to the batteries and then sold to the grid (or select "Zero Export" to prevent excess energy to the grid).

When the PV system does not produce enough energy, the battery will provide energy to the load first. If the batteries are also insufficient, the grid replenish the power for it.

2. Night:If the battery has sufficient energy, the load is supplied by the battery. If the battery is not sufficient, the load is provided by the grid

Note: The numbers 1, 2, and 3 in the chart below represent the energy supply or destination priority.

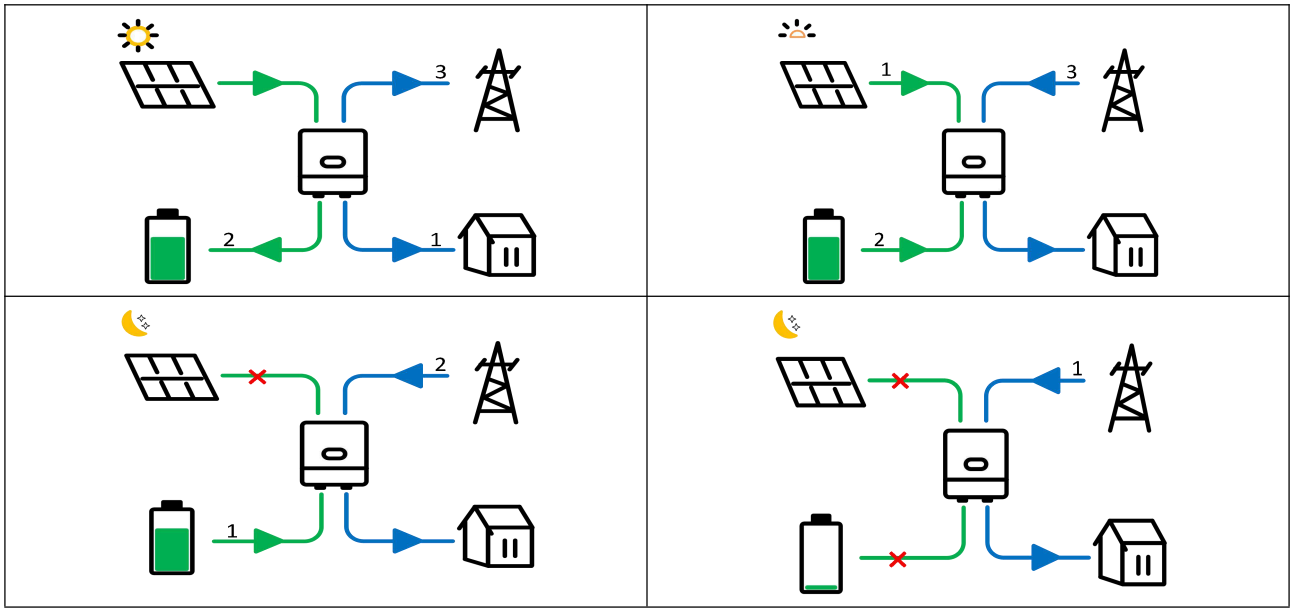

- The process for setting the "Grid outage-never" option is as follows:

©Dyness reserves the copyright of this document.

Step1

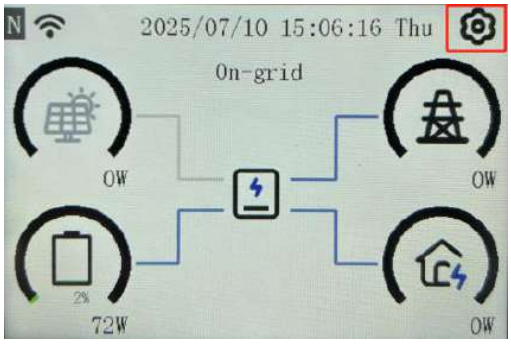

Step2

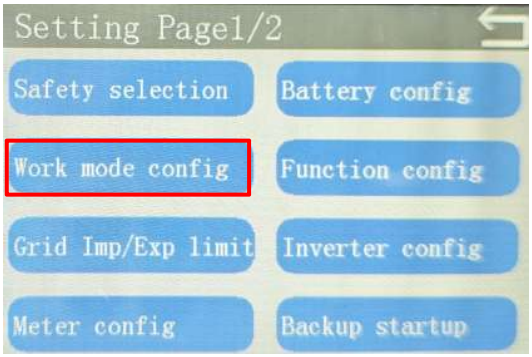

Step3

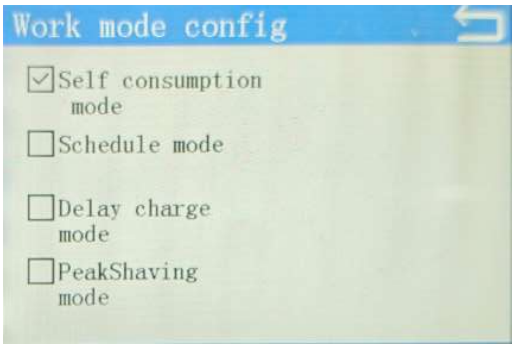

Step4

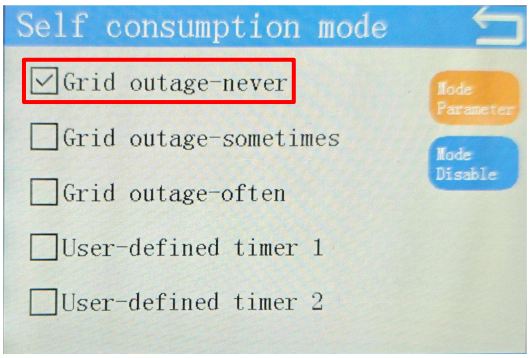

Step5

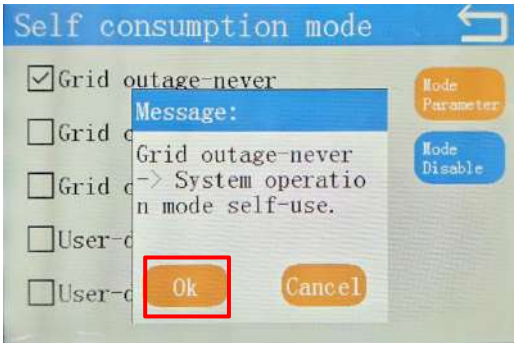

Step6

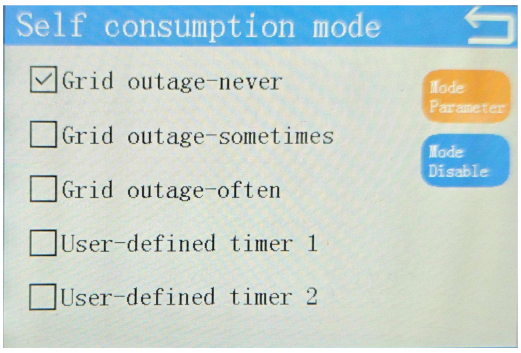

3.6.1.3 “Grid outage-sometimes” specification

- At present, the “Grid outage-sometimes” is the default working mode of the inverter when it is manufactured.

1. AC charge power：Set the maximum power for charging from the grid. If set to 0, only the PV energy will be used to charge the battery.
2. BACK-UP SOC：Set the minimum SOC state of the battery in this mode. When the battery's SOC is lower than the set value, it will continue to charge; if the battery's SOC is higher than the set value, it will allow supply power to the load during on grid period.

- The process for setting the “Grid outage-sometimes” is as follows:

Note: “Grid outage-often” and "Grid outage-sometimes" have the same operation settings.

©Dyness reserves the copyright of this document.

Step1

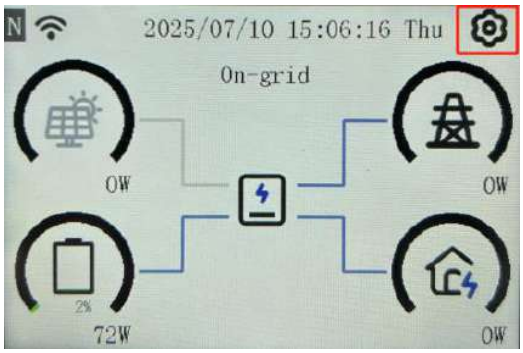

Step2

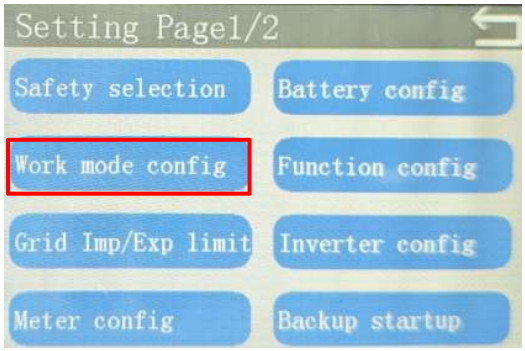

Step3

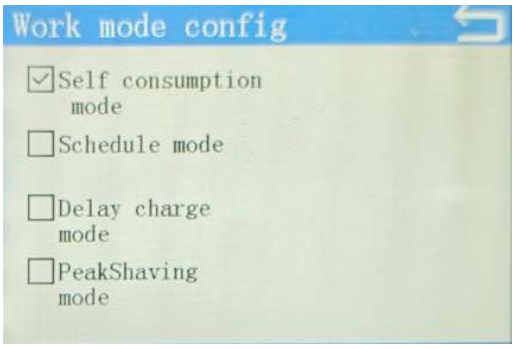

Step4

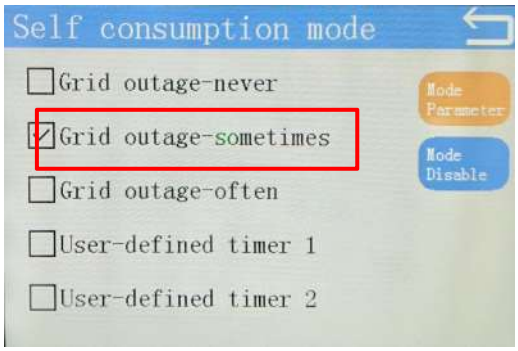

Step5

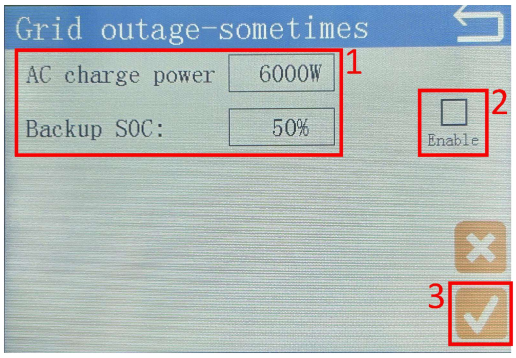

1. Set parameters;
2. Click “Enable”;
3. Click “√”

Step6

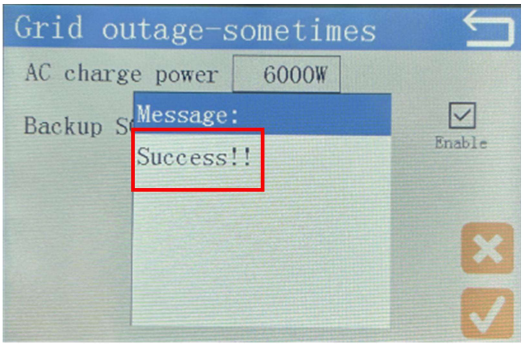

Step7

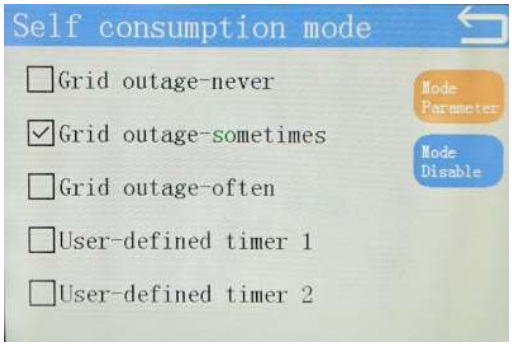

©Dyness reserves the copyright of this document.

3.6.1.4 “User-defined timer” specification

- The process for setting the “User-defined timer” is as follows:

Step1

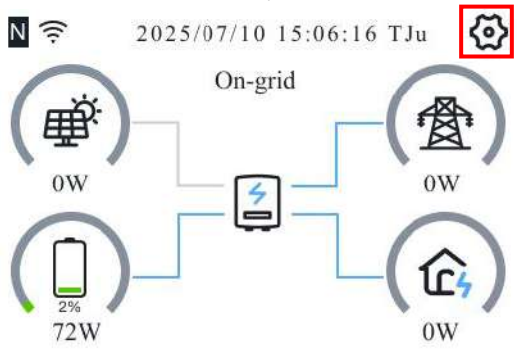

Step2

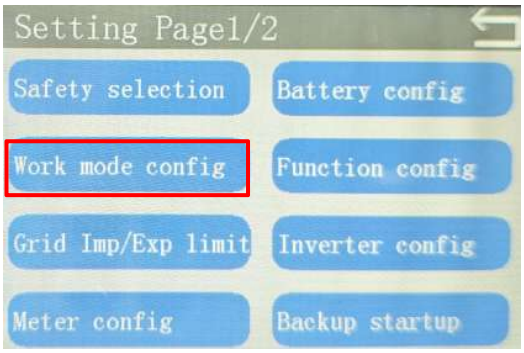

Step3

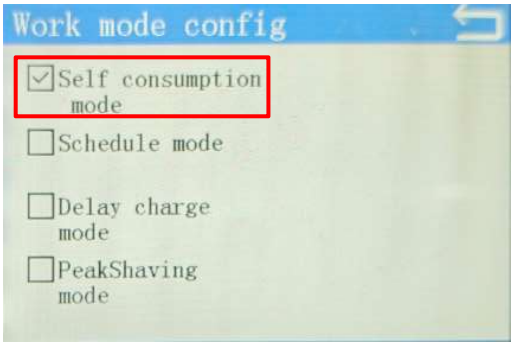

Step4

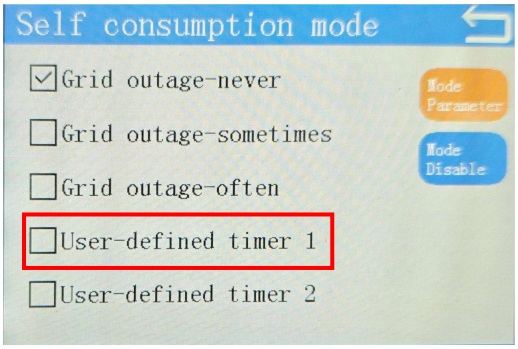

Step5

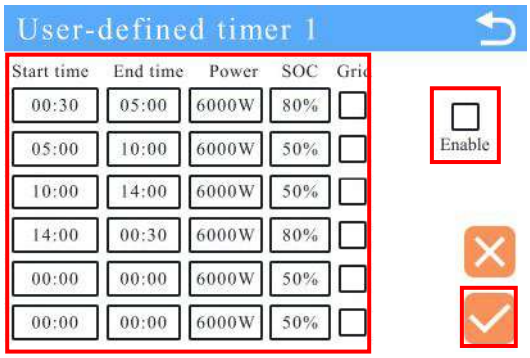

1. Set parameters;
2. Check "Enable";
3. Click “OK”

Step6

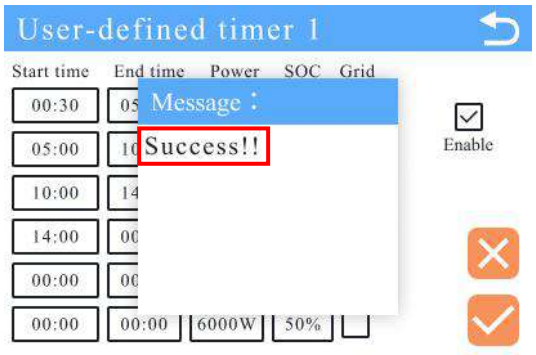

©Dyness reserves the copyright of this document.

<table>
<tr>
<td>


According to the demands of different time periods, the setting interface is shown in the figure.
</td>
<td>
Take the setting in the left picture as an example, the explanation is as follows：
1. During 00:30-05:30, when battery SOC is lower than 80%, the battery will be charged by the grid and PV together until the battery SOC reached 80%, the max charging power of grid is 6kW. When battery SOC is higher than 80%, the battery can discharge.
2. During 05:30-10:00 and 10:00-14:00, when battery SOC is higher than 50%, the battery will discharge until the SOC reaches 50%, the max discharging power is 6kW. When battery SOC is lower than 50%, the battery will be charged by the PV until the battery SOC reached 50% (Because the “Grid” was not selected, the grid does not participate in the charging process.)
During 14:00-00:30, when battery SOC is higher than 80%, the battery will discharge until the SOC reaches 80%, the max discharging power is 6kW. When battery SOC is lower than 80%, the battery will be charged by the PV until the battery SOC reached 80% (Because the “Grid” was not selected, the grid does not participate in the charging process.)
</td>
</tr>
</table>

- Explanation of Parameter

1. Grid：Enable switch for charging the battery from the grid.

2. Enable：The user-defined timer function enable switch. The parameter settings of this mode will only take effect after clicking "Enable" and the "√" button.

3. "√"：Button for confirming parameter changes. After modifying the setting values, you must click the "√" button for the changes to take effect.

4. "×"：Button for canceling parameter changes. After clicking the "×" button, the current parameter modification can be cleared.

5. Start/End time：The beginning and end of the time period. Support for zero-crossing setting (such as 23:00-01:00). If the start time is the same as the end time, it is considered an invalid setting and the system will not execute the action for this time period.

In addition, if the 6 time periods do not cover the entire 24 hours of the day, then the battery will not allow discharging when it is not within the set time period. If “Priority BAT” is selected (the default setting), the PV energy will be first used to charge the battery, and the excess will supply to the load; if “Priority Load” is selected, the PV energy will be first used to supply the load, and the remaining will be used to charge the battery.

©Dyness reserves the copyright of this document.

6. Power(W)：Set the power for this time period. If the Power setting is 0, only the PV energy will be used for charging.

If the "Grid" option is selected (which means "grid charging"), then this value is the "maximum power for charging from the grid". If the "Grid" option is not selected, then this value is the “maximum discharge power of the battery during this period".

7. SOC：Set the minimum SOC of the battery for this period of time.

(1) If the "Grid" option is selected (which means "grid charging"), When the battery SOC is lower than the set value, the battery will be charged by the grid and PV. The PV energy will still be prioritized for charging the battery .

(2) If "Grid" is not selected, the battery's SOC will stop discharging once it reaches the set value. When the PV energy is in excess, the remaining PV energy will be used to charge the battery.

(3) When the battery's SOC is below the set value:

Case1: if “Priority BAT” (the default setting) is selected, the PV energy will be prioritized for charging the battery and the remaining power will supply to the load;

Case2: if “Priority Load” selected, the PV energy will be prioritized for supplying the load, and the remaining power will be used to charge the battery.

3.6.2 Schedule Mode

- Users can customize multiple “ECO timer”. Taking the “ECO timer 1” as an example, users can set the working status of the inverter during a period of time on the one day, and can cycle by weeks. The operation is as follows:

1. Power(Pn)：The power purchased from the grid (as a percentage of the rated power)
2. Target SOC：Battery target SOC value
3. Sun、Mon ... ALL：”ALL” represents all seven days of a week. Clicking on it means selecting all days for the week. If you want to remove a certain day, you need to click on it to make it turn gray.

Step1	Step2
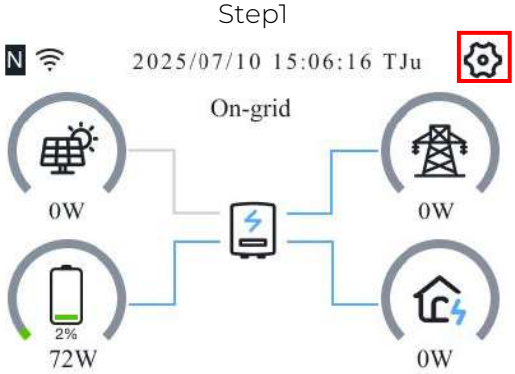	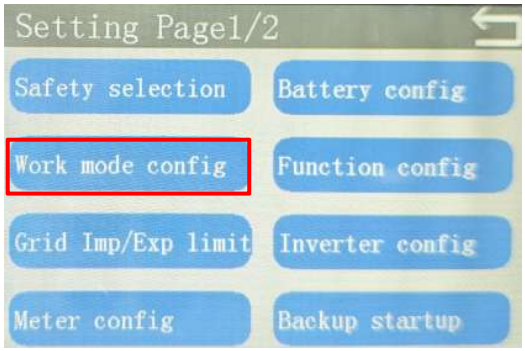

©Dyness reserves the copyright of this document.

Step3

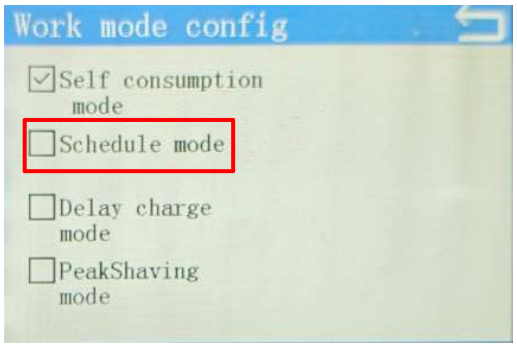

Step4

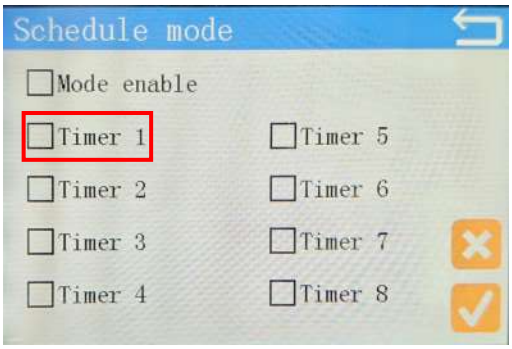

Step5

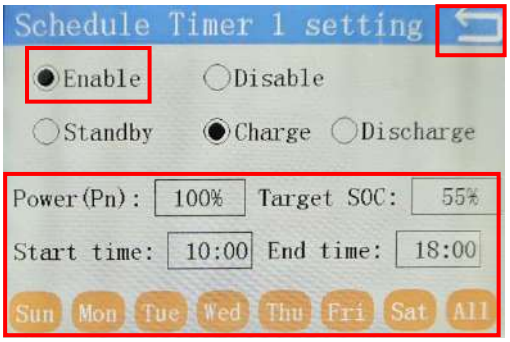

1. Set parameters
2. Click “Enable”
3. Return

The overall setting means: From 20:00 to 21:00 every week, 50% of the rated power is purchased from the grid to charge the battery, and the target SOC is 50%.

Step6

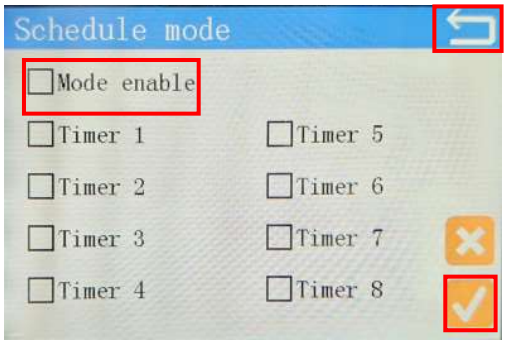

1. Click “Mode Enable”
2. Click “√”
3. Prompt: Success! Click “Return”

Step7

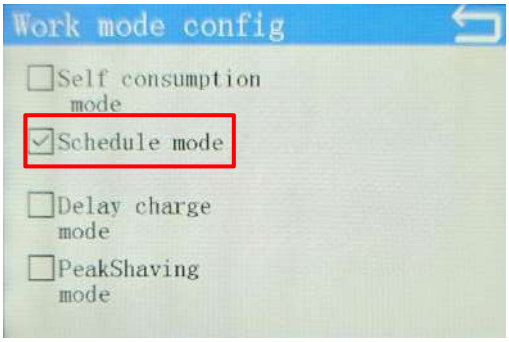

It can be seen that “schedule mode” has been successfully set.

- Application Scenarios

Suitable for use in scenarios where there is a large difference between **peak and valley electricity prices**.

©Dyness reserves the copyright of this document.

1. When the price of electricity is at its **peak**, the battery can be set to discharge (both the power and time of discharge can be set), and in addition to supplying the load, the excess energy will be fed into the grid.
2. Battery charging can be set when the electricity price is in the **valley** (charging power and time can be set)

Note: The system operates in the self-use mode for unscheduled periods of time.

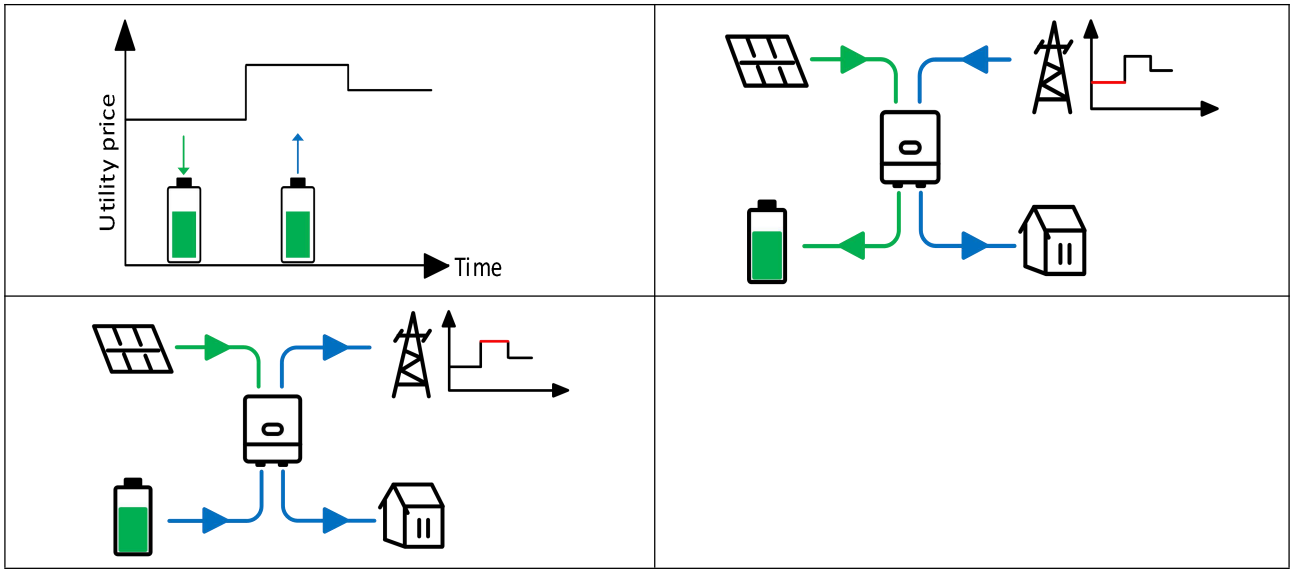

3.6.3 Delay charge mode

- The operation for setting the "Delay charge mode" is as follows：

1. **Output Peak Power(Pn)**：The power sold to the grid (as a percentage of the rated power)
2. **Sell start/end time**：The start and end time of this mode's period of operation

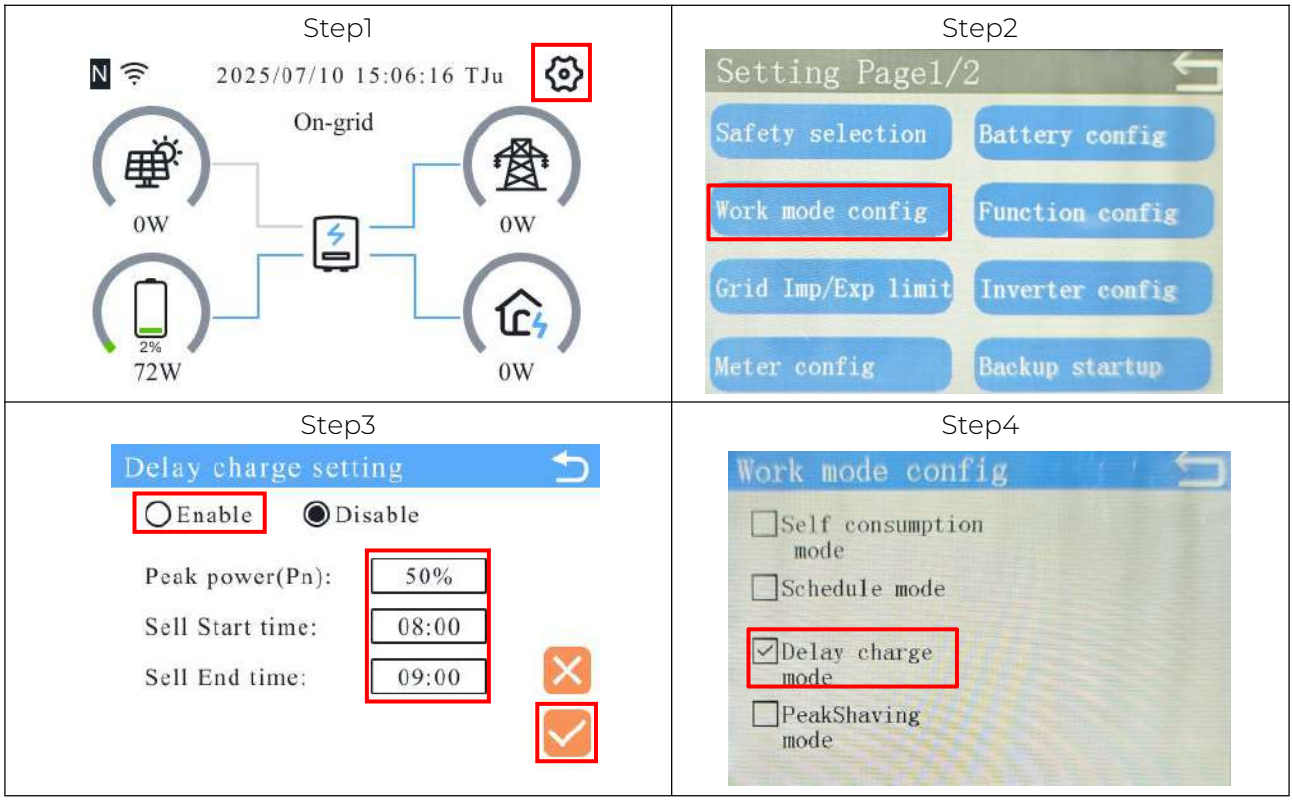

©Dyness reserves the copyright of this document.

1. Set parameters 2. Click “Enable” 3. Click ”√” The overall setting means: During the period from 8:00 to 9:00, the peak power output of the inverter is set at 50%. When the PV power is less than 50%, the PV power is used for the load and sold to the grid. When the PV power is greater than 60%, the excess part can be used to charge the battery.	It can be seen that “Delay charge” has been successfully set.

- Application Scenarios：

Applicable to the scenario of **PV over-allocation.**

In the morning when the PV power is lower than the setting power the selling of electricity is prioritized, the battery is not charged first to leave space for later charging, and when the PV power exceeds the setting power or is not in the set time period, the normal self-use mode is resumed.

The advantage of this model is that **it can avoid the waste of PV energy in PV over-allocation application scenarios**.

Note:

1. The numbers 1, 2, and 3 in the chart below represent the priority of energy provision or destination.
2. The system operates in the self-use mode for unscheduled periods of time.

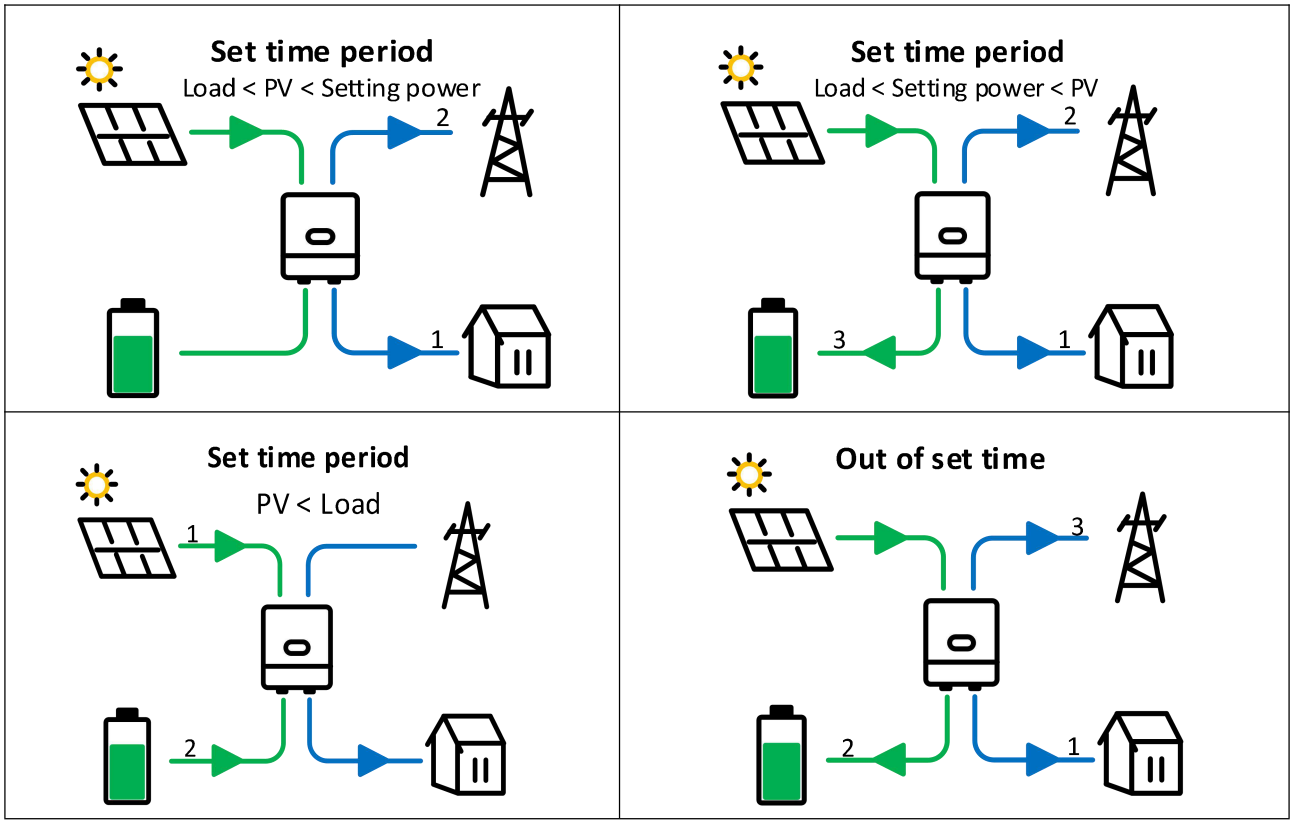

©Dyness reserves the copyright of this document.

3.6.4 Peak Shaving mode

- The operation for setting the "Peak Shaving mode" is as follows：

1. **Peak power limit(W)**：Set a limit value for power purchase. Whenever the power consumption exceeds the limit value at any time, the battery will discharge.
2. **Reserved SOC**：Set how much SOC of the battery is reserved for peak shaving discharge.
3. **Grid charge**：Choose whether to use the power grid to charge the battery.
4. **Charge time**：Set the period during which the battery is charged using the power grid

Step1

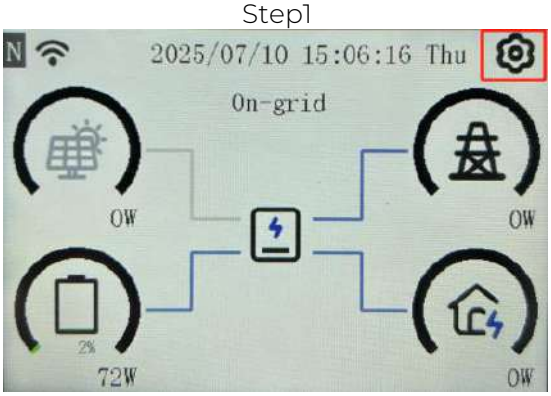

Step2

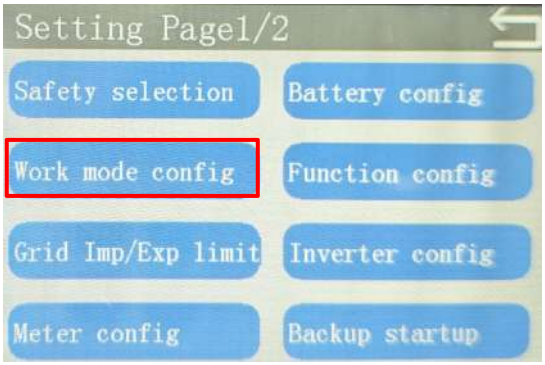

Step3

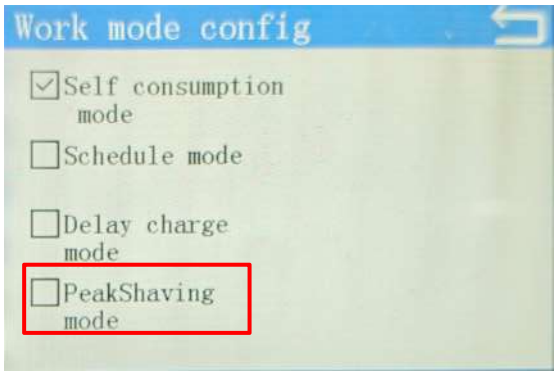

Step4

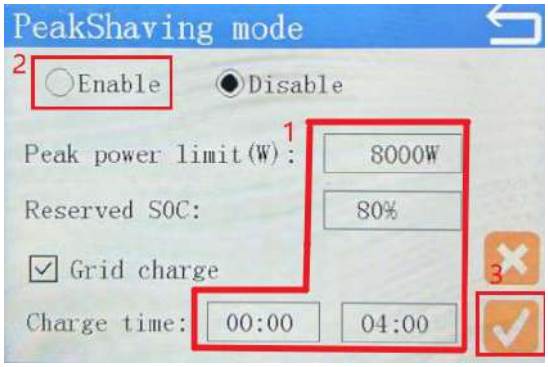

1. Set parameters
2. Click “Enable”
3. Click ”√”

The overall setting means:

1. Allow the battery to be charged from 0:00 to 4:00, the “Reserved SOC” is set at 80%, the “Peak power limit” is set to 8000W.

2. From 0:00 to 4:00 in the morning, if the battery's SOC is below 80%, the system will charge the battery within the condition that the power purchased does not exceed 8000W. The charging will stop when the battery's SOC reaches 80%, and then the battery will remain in

©Dyness reserves the copyright of this document.

	standby mode and will not discharge. 3. If the peak power consumption of the user during this period exceeds 8000W, the battery will immediately stop charging and start discharging to smooth out the peak load. 4. During the period from 04:00 to 23:59. When the battery's SOC is less than or equal to 80%, the battery is in standby mode and will only discharge when the user's power consumption exceeds the limit power. When the battery's SOC is greater than 80%, the battery is allowed to discharge and the system switches to self-use mode. If there is PV, the PV will prioritize meeting the load, and any remaining power from the PV will be used to charge the battery.
Step5 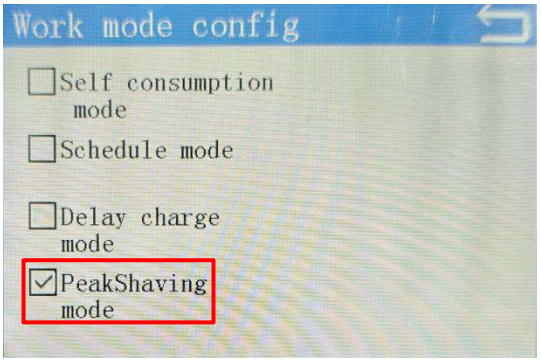 It can be seen that “Peak Shaving ” has been successfully set.	

- Application Scenarios：

Applicable to the scenario where the purchased power is limited. When the purchased power exceeds the allowed threshold, the battery is discharged and replenished to **avoid being penalized with high charges**.

Note:

1. When the electricity purchased from the power grid exceeds the **“Peak power limit”**, the battery discharge to replenish the power.
2. When the electricity purchased from the power grid does not exceed the **“Peak power limit”**, the system operates in the self-use mode.

©Dyness reserves the copyright of this document.

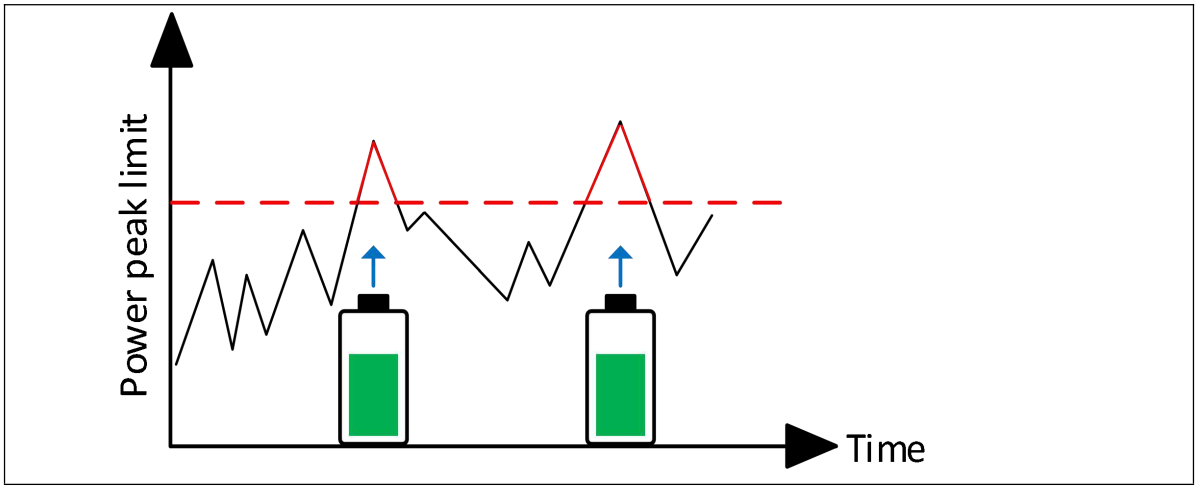

©Dyness reserves the copyright of this document.

4. Inverter Installation

4.1 Pre-receipt inspection

	Before installation, please check the packaging for any abnormalities such as damage or deformation to ensure that the goods are in good condition. If there is any obvious damage, please do not install and contact the supplier promptly.

4.2 Packing List

- Open the package and check whether the following items are included in the accessory package, if there is any missing, please contact the after-sales service immediately.

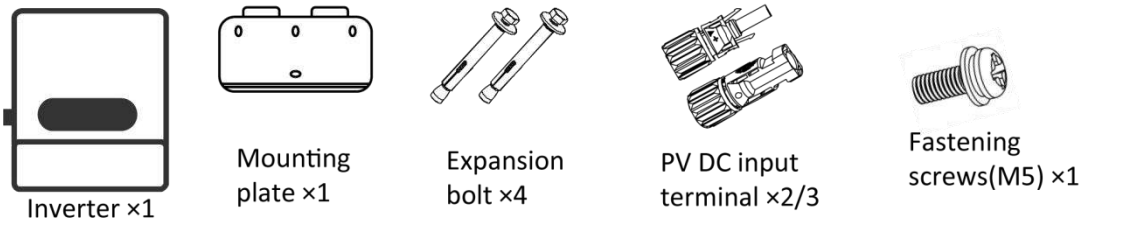

- The meter kit is an optional accessory and must be purchased separately by the user.



4.3 Installation Tools

Please prepare the following professional tools for installing the inverter.

©Dyness reserves the copyright of this document.

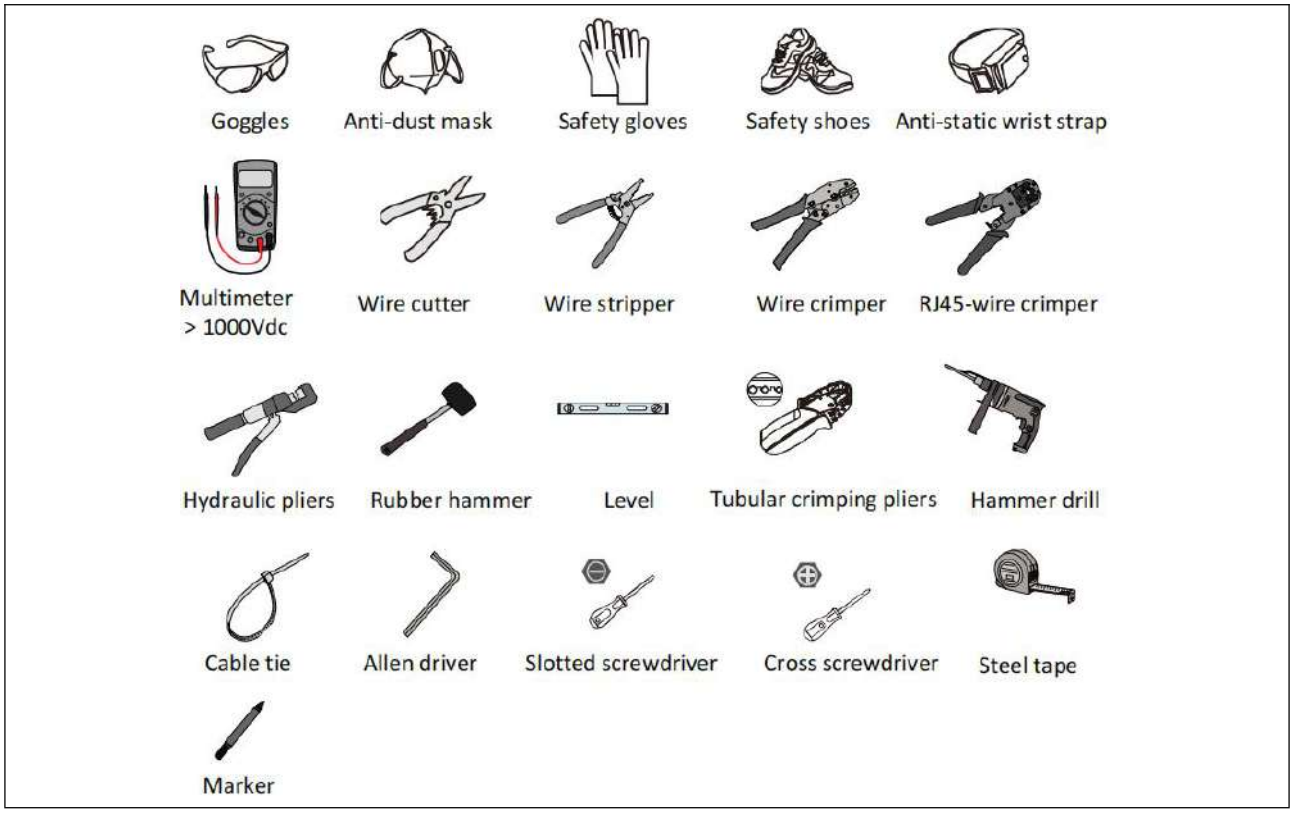

4.4 Installation Requirements

- Environmental requirements

⚠	1. Don't install the equipment in an environment with flammable, explosive, corrosive materials 2. Don't install the equipment in the place where it can be easily touched, especially for children. 3. Drill holes to avoid water pipes and electrical cables in the wall 4. The inverter should be installed to avoid direct sunlight, rain, and snow. 5. The space where the equipment is installed should be well ventilated for heat dissipation and operation. 6. The altitude at which the inverter is installed should be less than the maximum working altitude of 3000m above sea level.

©Dyness reserves the copyright of this document.

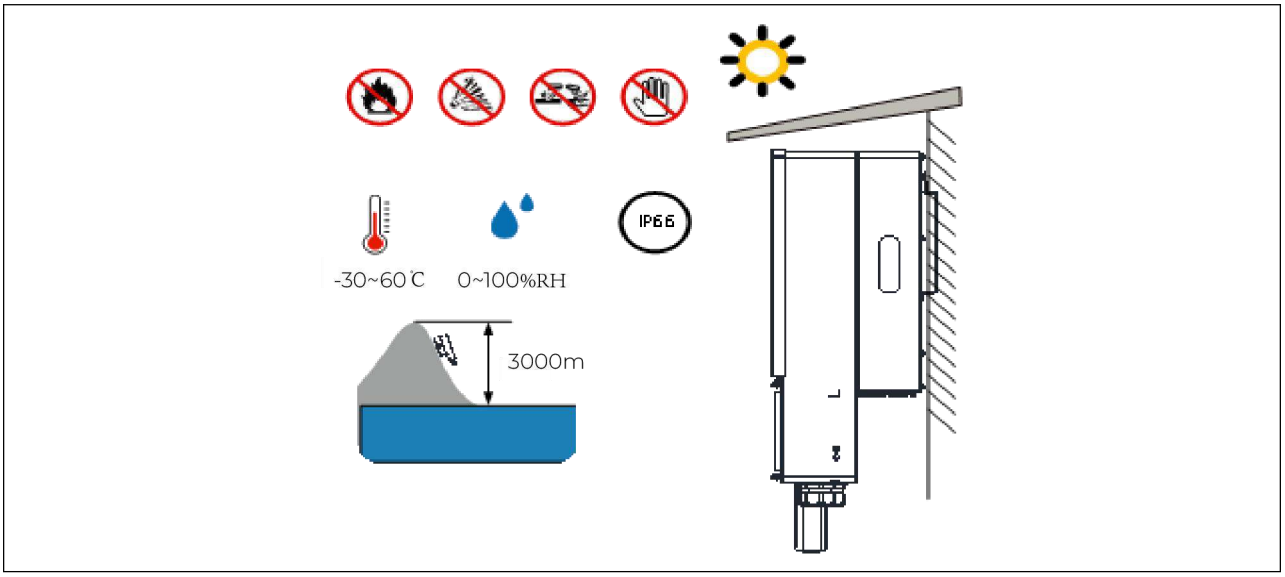

- Space requirements

Installation of the inverter, need to reserve enough space for heat dissipation, not less than 300mm

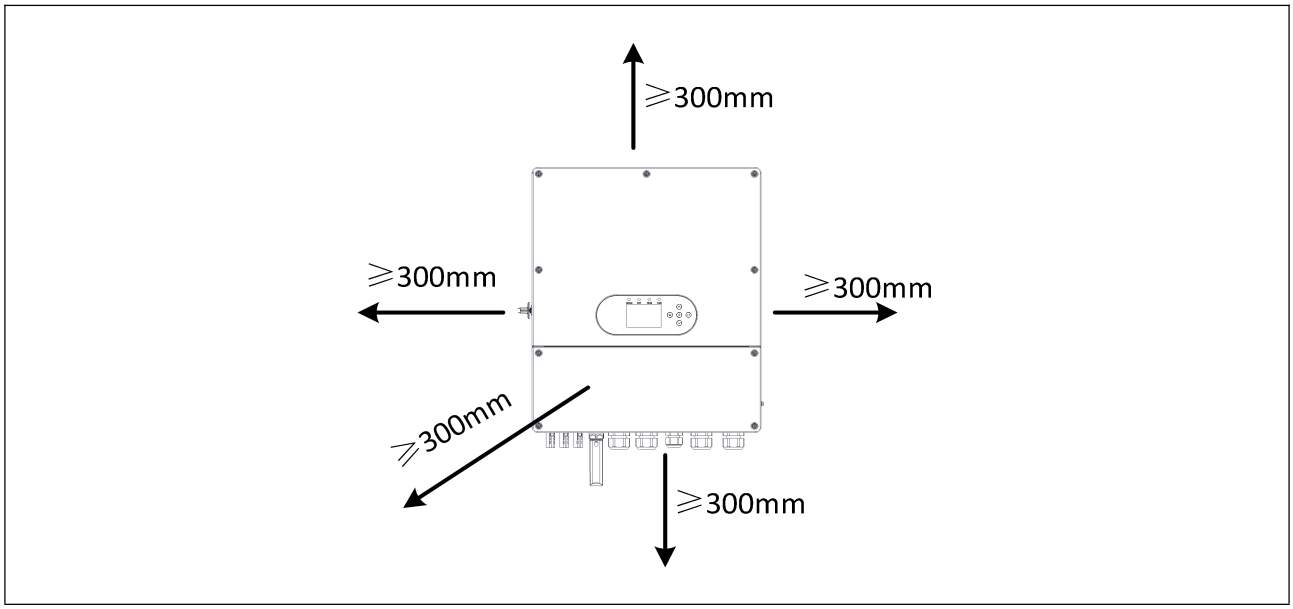

- Angle and Load Carrier Requirements

1. Mount the inverter on a solid surface to bear the weight.
2. Do not install the inverter on a poorly soundproofed carrier to avoid noise.
3. Mount the inverter at an angle of up to 5 degrees backward, not forward, inverted, sideways or excessively tilted.

©Dyness reserves the copyright of this document.

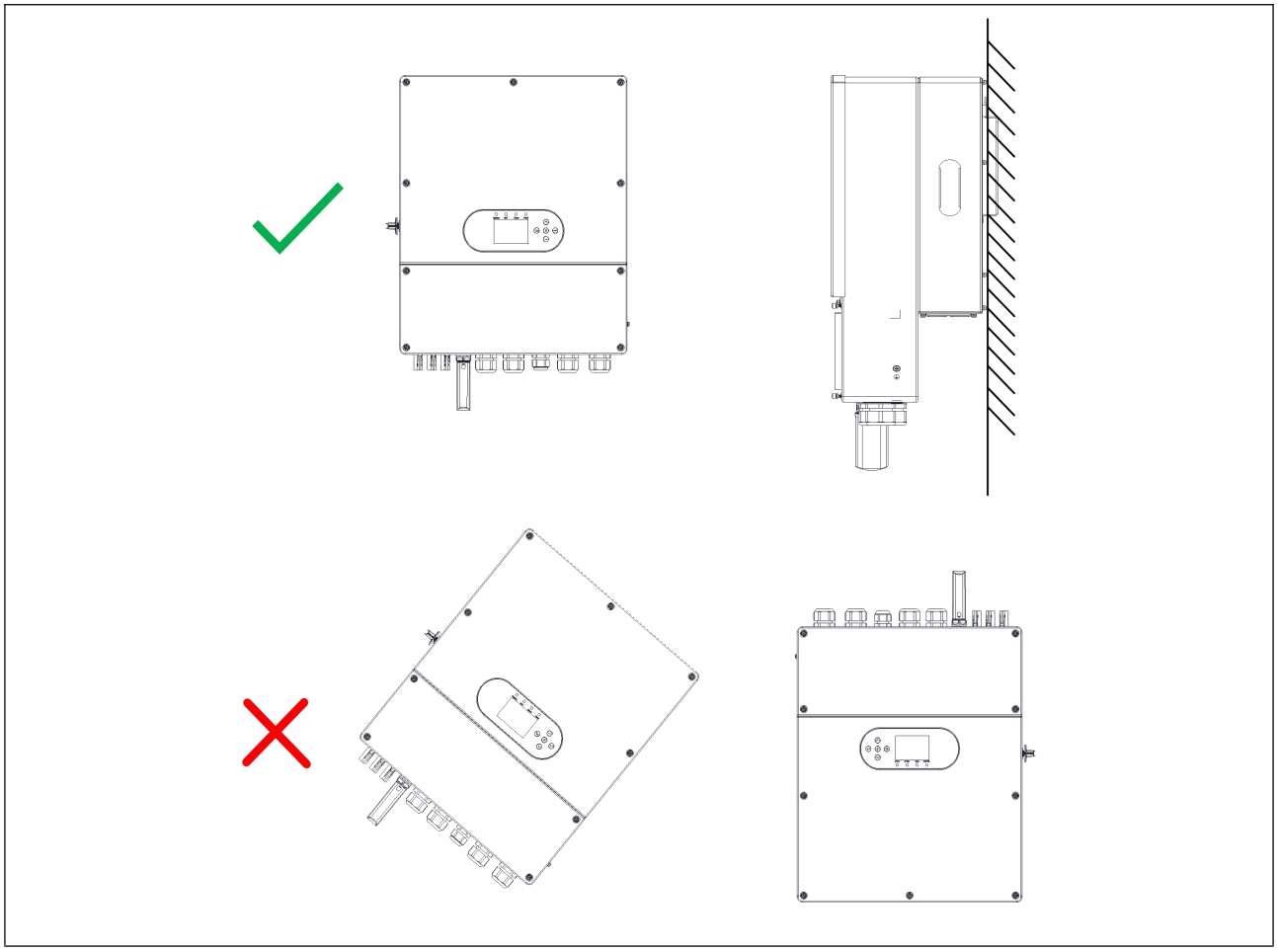

4.5 Installation steps

Step 1: Place the backing plate supplied with the box on the wall and mark the drilling position.

Step 2: Drill the holes with a hammer drill with an 8mm diameter drill bit to a depth of 80mm.

Step 3: Fix the drilled holes on the wall with the expansion bolts supplied with the accessory package.

Step 4: Hang the inverter vertically on the back plate and make sure it is securely mounted.

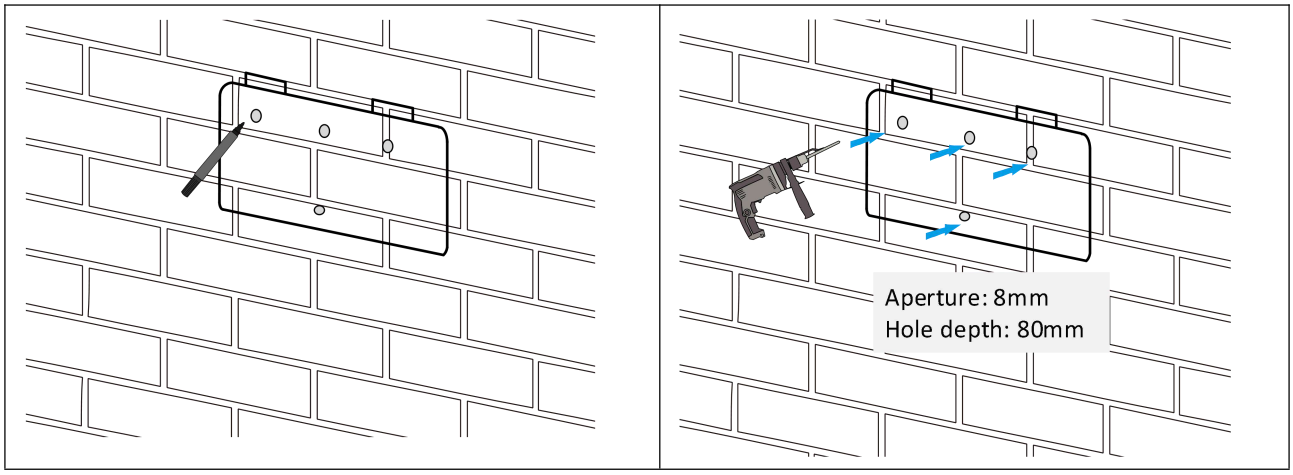

©Dyness reserves the copyright of this document.

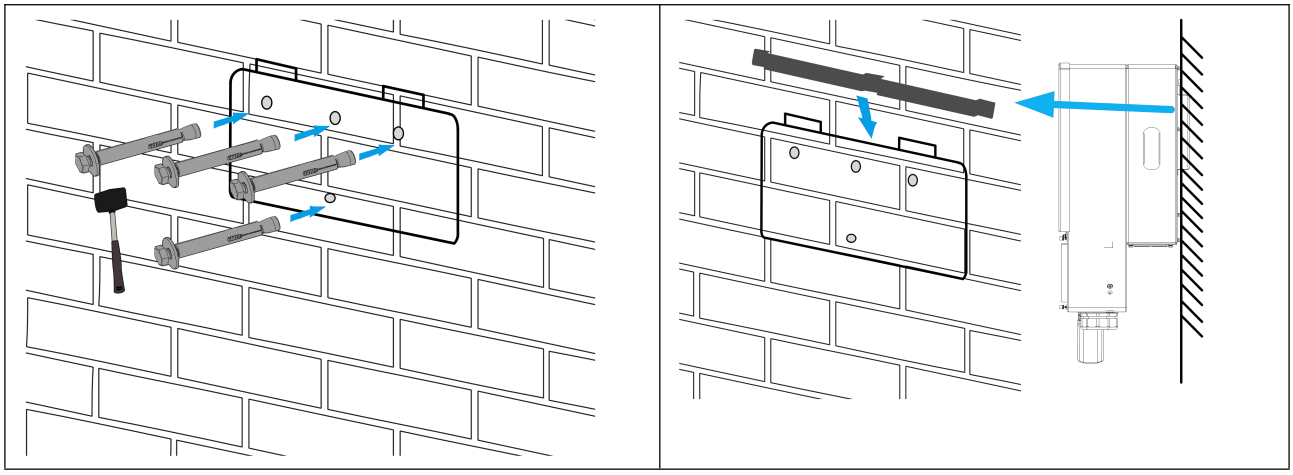

©Dyness reserves the copyright of this document.

5. Electrical Connection

5.1 Wiring Diagram

Two wiring diagrams are as follows:

1. According to the regulations and requirements of different regions, N and PE are connected in different ways. Please choose the wiring method reasonably.
2. When the inverter is powered on, the BACK-UP port is energized. Power off the inverter first if maintenance is required on the BACK-UP loads. Otherwise, it may cause electric shock.
3. The wiring diagram takes the internal meter as an example. The inverter has the internal meter. If the length of the CT connection to the inverter is more than 30 meters, you can choose to use an external meter (see section 5.5.3).
4. Disconnect all circuit breakers and verify zero voltage before carrying out any wiring work.

- N and PE of backup terminals are wired together in the distribution box for regions such as Australia and New Zealand.

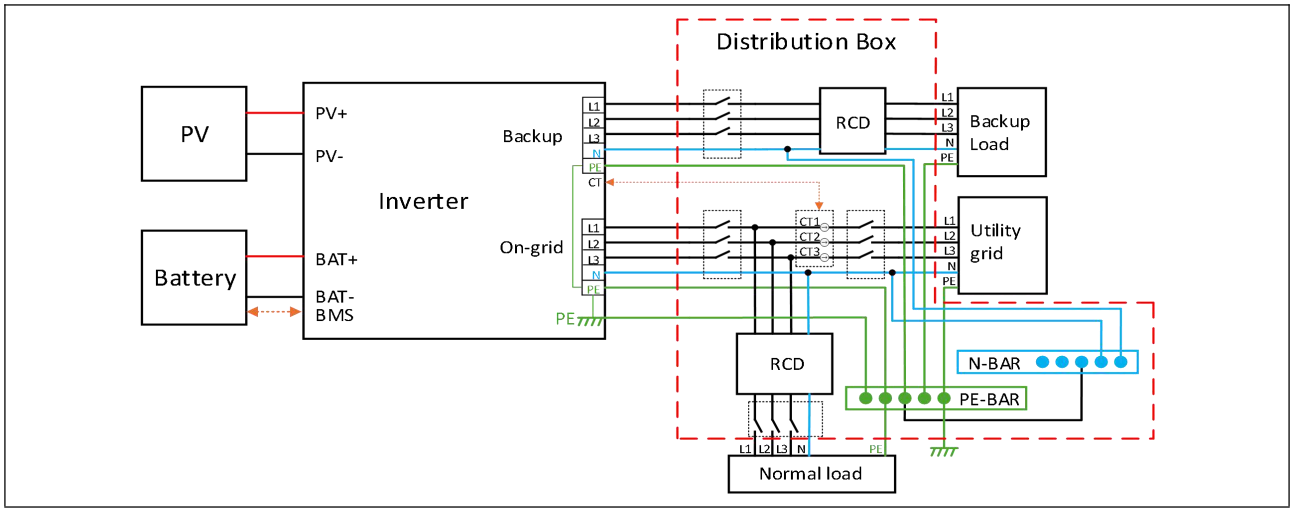

- N and PE of Backup terminal are wired independently in the distribution box, suitable for most areas.

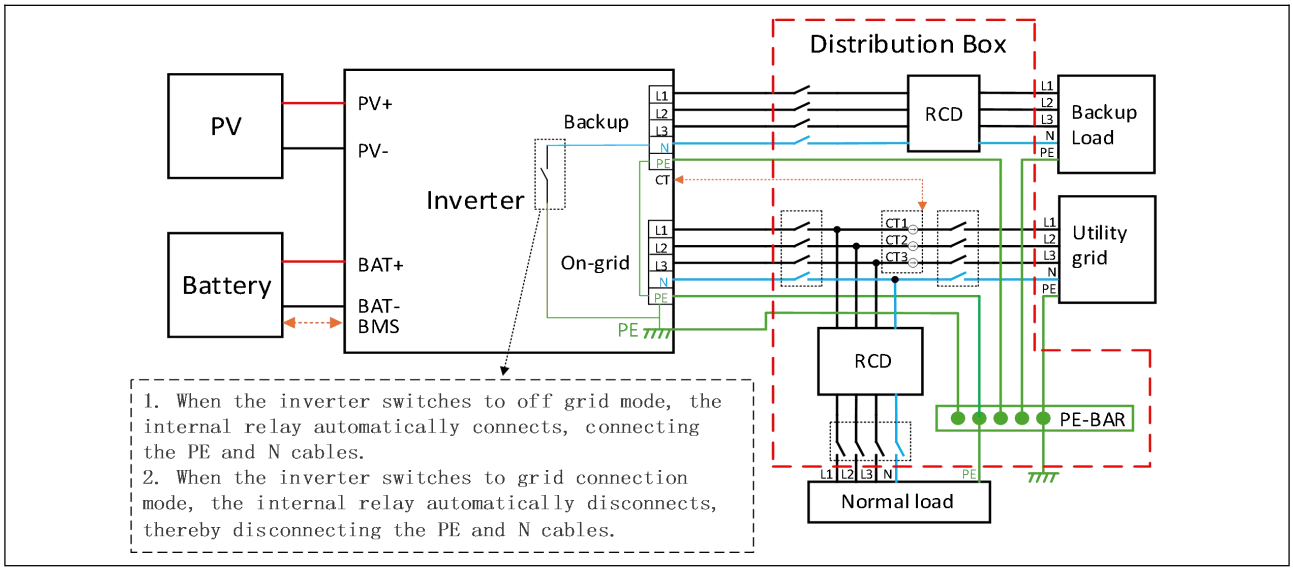

©Dyness reserves the copyright of this document.

- Some regions require that “N and PE” can not be directly connected inside the inverter. Users can control their disconnection or closure of “N and PE” according to the actual needs of the site, the operation steps are as follows:

1. Click on the "N-PE relay SW" option, which indicates that “N and PE” are connected within the inverter.
2. Do not click on the "N-PE relay SW" option, which indicates that “N and PE” are not connected within the inverter.

<table>
<tr>
<td>Step1
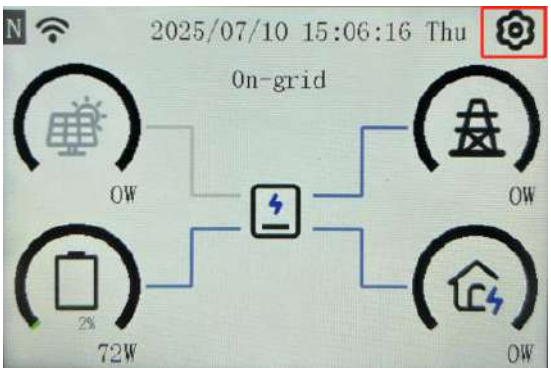
</td>
<td>Step2
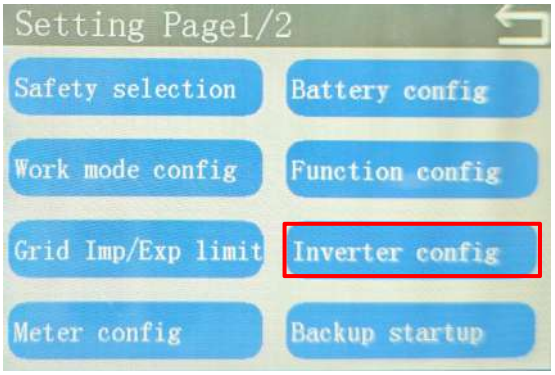
</td>
</tr>
<tr>
<td>Step3
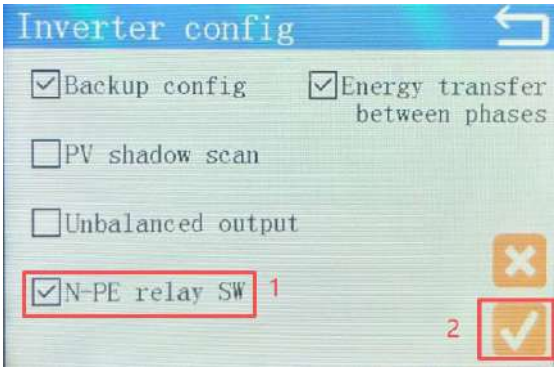

1. Click “N-PE relay SW”
2. Click “√”</td>
<td></td>
</tr>
</table>

5.2 Grounding

- The inverter has a dedicated grounding point, to connect the ground wire please make sure that

1. The ground wire connected to the inverter frame cannot replace the ground cable connected to the AC output, make sure both are grounded.
2. When using more than one inverter, please make sure that the grounding points of all inverter frame housings are connected at equal potential.
3. To improve the corrosion resistance of the metal terminal, please apply silicone or paint after installing the ground cable.

- Grounding cable specification recommendations

©Dyness reserves the copyright of this document.

Model	Type	Cable Specifications
HT-A 5-15K	Copper wire cable	Copper core cross-sectional area 6mm^2~10mm^2

- Ground cable wiring procedure

1. Cable stripped 7-8mm at one end and thread it into the heat shrink tubing.

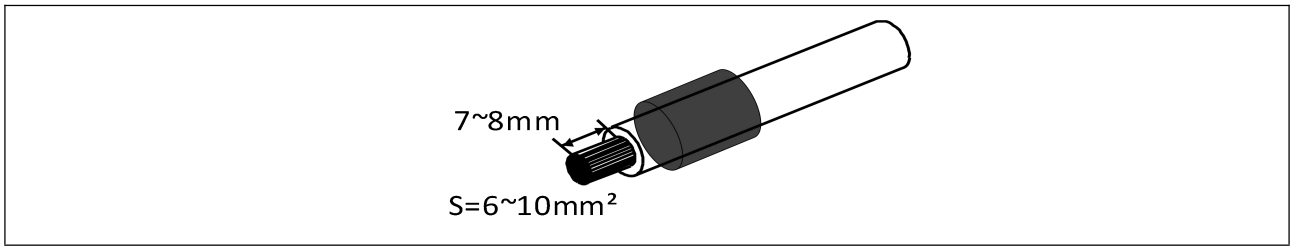

2. Using crimping pliers, crimp the ground wire to the ground terminal supplied with the accessory package and blow the heat shrink tubing tightly with a heat gun.

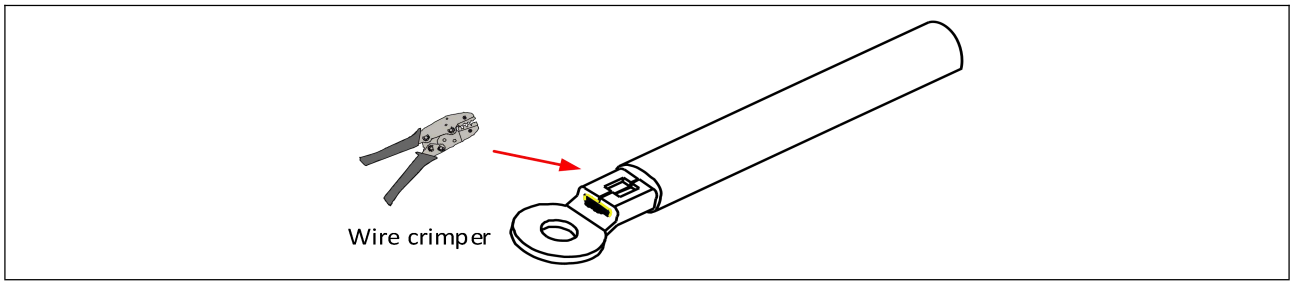

3. Connect the ground wire to the ground terminal of the box and lock it using the M5 ground screw and PH2 cross-head screwdriver included in the accessory kit. Recommended tightening torque: 1.2 N·m.

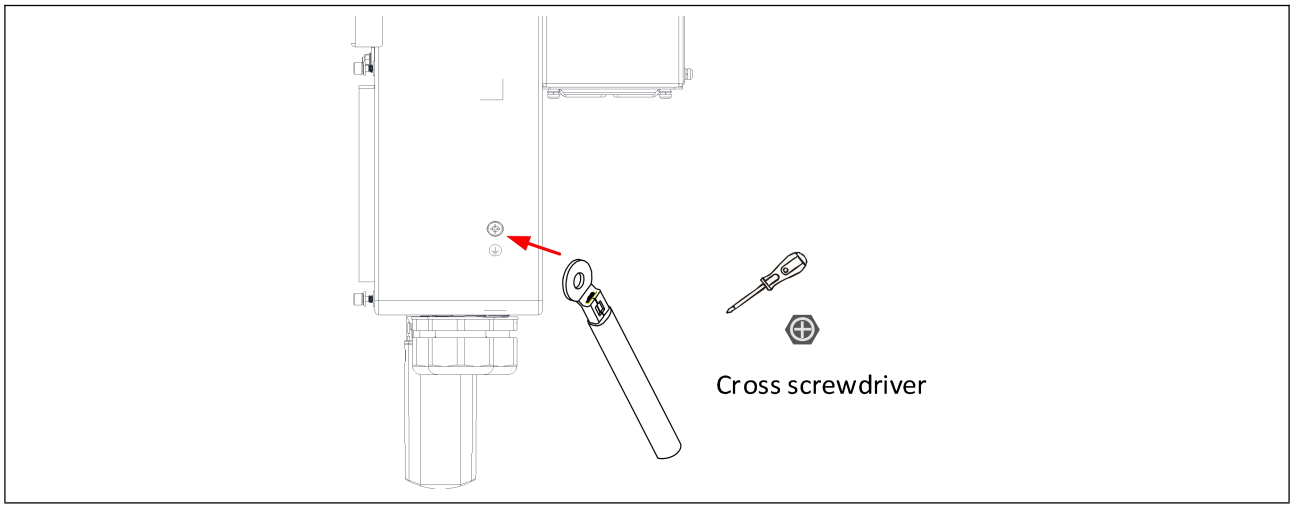

Note：Connect the protective earth wire first during installation, and disconnect it last during removal or maintenance.

5.3 PV connection

- The inverter has 2/3 sets of PV inputs, to connect the PV cables make sure that

1. The open-circuit voltage of the panel is within the input voltage range specified by the inverter, and the operating voltage is within the MPPT range.
2. The panel cannot be grounded to ensure that the minimum insulation resistance to ground meets the minimum insulation impedance requirement.
3. The short-circuit current of the panel is within the range specified by the inverter.

©Dyness reserves the copyright of this document.

4. Positive and negative poles are connected correctly.
5. Use the connectors supplied with the accessory package, and prohibit different brands from plugging into each other.
6. It is not recommended to connect MPPT series in parallel, otherwise it will affect the tracking efficiency of MPPT. If you need MPPT series parallel access, please note that MPPT1+MPPT3 parallel access is not supported. MPPT series parallel access must meet local laws and regulations.

- PV Cable Specification Recommendations

Model	Type	Cable Specifications
HT-A 5-15K	Copper wire cable	4-6mm^2

- PV Cable Wiring Procedure

1. Cable stripped 7-8mm at one end, cross sectional area 4-6mm^2

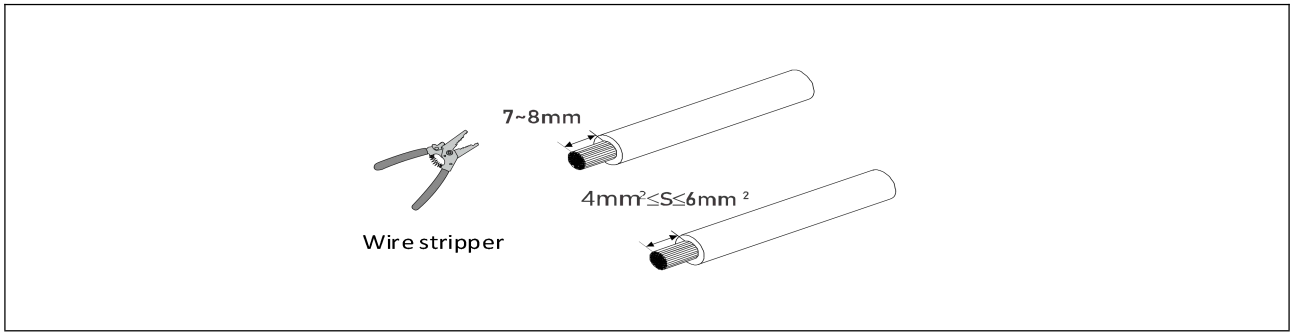

2. Take out the metal terminal and thread the dialed cable

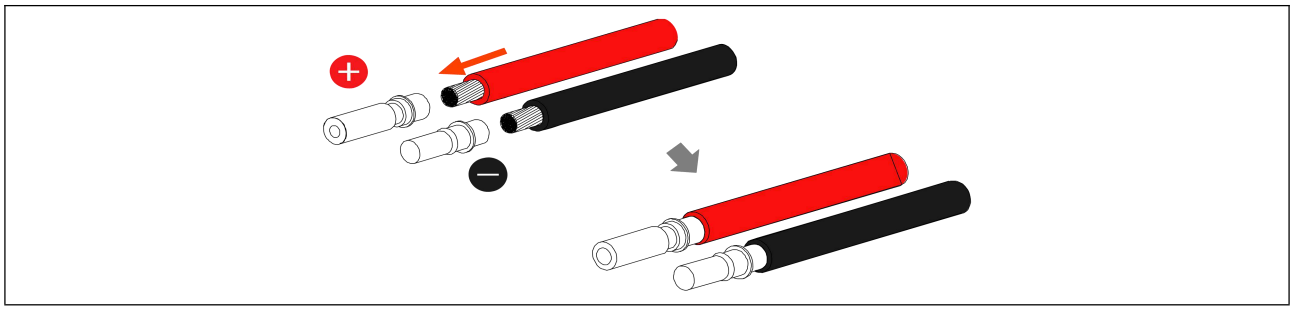

3. Use crimping pliers to crimp the unwound cable to the connector

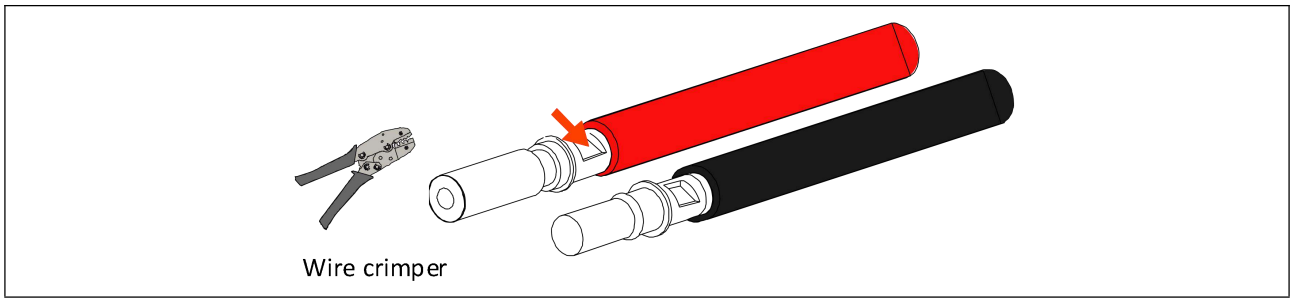

4. Thread the metal terminal through the nut and into the connector until you hear a “click”.

©Dyness reserves the copyright of this document.

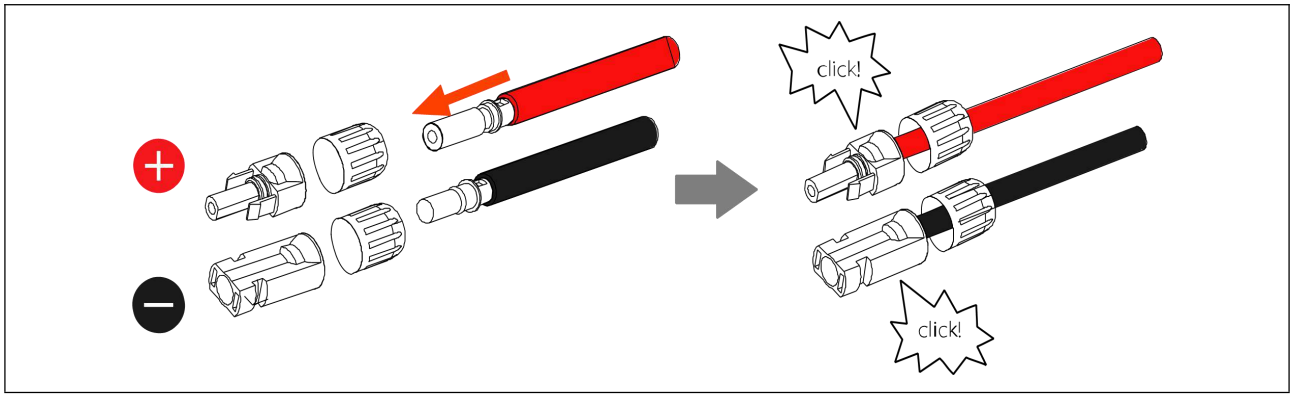

5. Use a multimeter to measure the positive and negative terminals and DC voltage <1000V, then lock the nut.

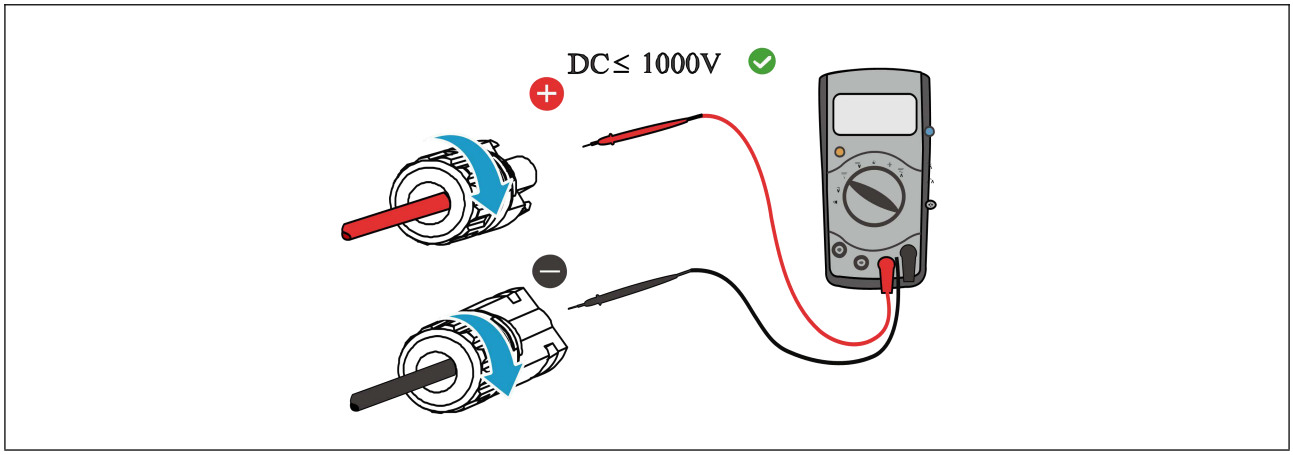

6. Insert the connector into the inverter and “click” to tighten it.

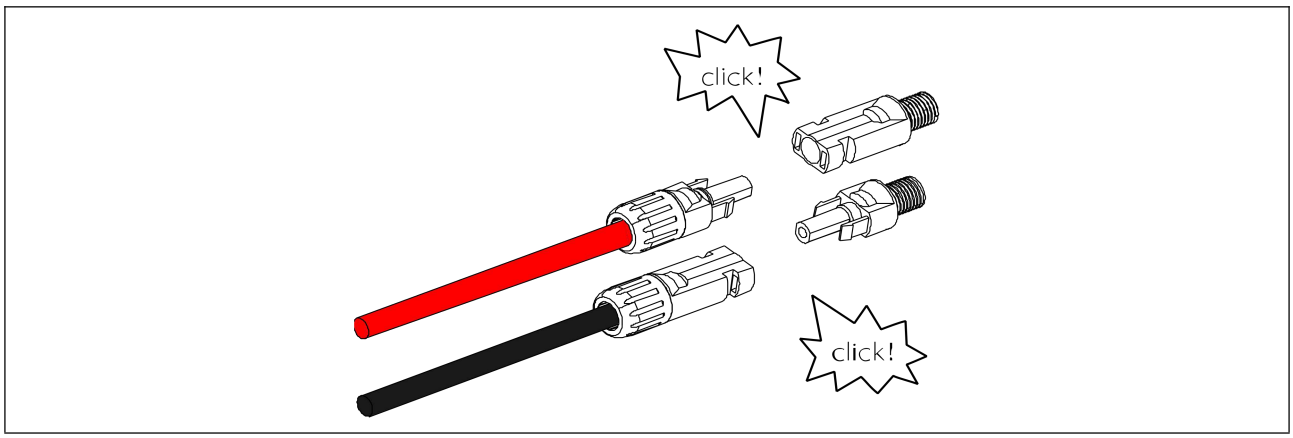

5.4 AC, Battery Connection

- **The inverter needs to be connected to its matching battery, to connect the battery cable make sure that**

1. It is prohibited to connect the same battery pack to multiple inverters simultaneously.
2. The positive and negative terminals of the battery cannot be grounded, please ensure that the minimum insulation resistance to ground meets the minimum insulation impedance requirements
3. All power circuits of the inverter, battery and battery-side circuit breaker must be disconnected.

©Dyness reserves the copyright of this document.

4. Battery voltage is within the permissible range of the inverter.
5. The positive and negative terminals of the batteries are correctly connected.

- Battery Cable and Circuit Breaker Specification Recommendations

Model	Part	Type	Specifications
HT-A 5-15K	Cables	Copper wire cable	Copper core cross-sectional area $10mm^2$~$16mm^2$
	Circuit Breakers	DC Circuit Breaker	Nominal voltage ≥ 750V Nominal current ≥ 50A

- The inverter has two sets of AC interfaces, Backup and On-grid, to connect the AC cables make sure that

1. AC circuit breakers should be installed separately on the AC side of each inverter to ensure that the inverter can be safely disconnected from the grid in the event of an abnormality.
2. The leakage current monitoring unit is integrated inside the inverter. Make sure the device is grounded, when the leakage current exceeds the allowable limit, the inverter will quickly disconnect the output and stop working.
3. When the inverter is powered on, the Backup port is powered on. If you need to maintain the loads in the Backup port, please disconnect the inverter first.

- Suggested Specifications for AC Cables and Breakers

Port	Part	Type	Specifications	
Backup, On-grid	Cables	Copper wire cable	Copper core cross-sectional area $6mm^2$~$10mm^2$	
	Circuit Breakers	AC Circuit Breaker	HT-A 5K、6K、8K	Nominal current ≥ 25A，Nominal voltage ≥ 230Vac
			HT-A 10K、12K、15K	Nominal current ≥ 32A，Nominal voltage ≥ 230Vac

- AC, Battery Cable Wiring Procedure

1. Cable stripped 7-8mm at one end.

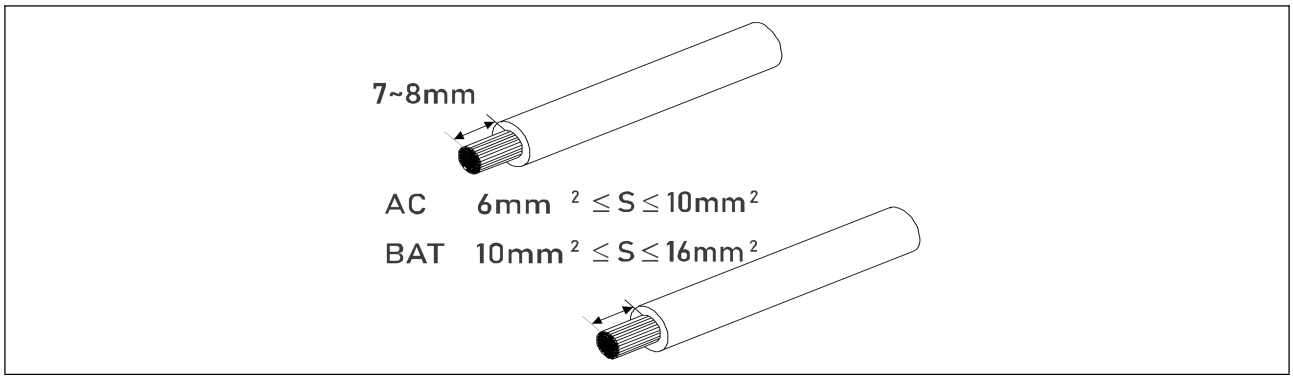

2. Using the tubular terminals included in the accessory package, thread the unraveled cables and crimp them together using tubular crimping pliers.

©Dyness reserves the copyright of this document.

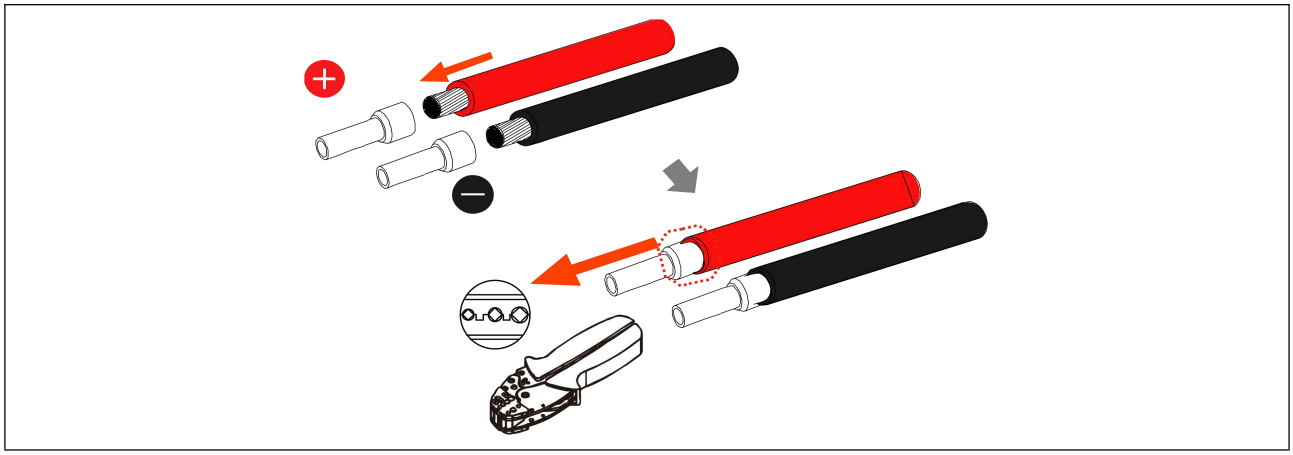

3. Remove the lower cover plate using a allen driver

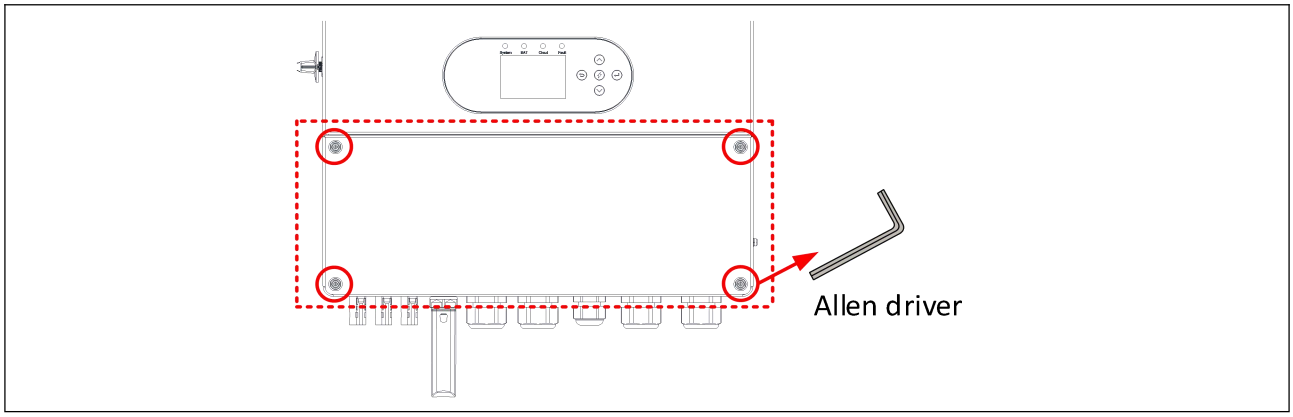

4. The AC is connected in the same way as the battery, and the procedure for connecting the cables is as follows:
   1) Loosen the gland nut by turning it to the left.
   2) Thread the cable into the glands.
   3) Lift up the terminal clamp (yellow).
   4) Insert the cable into the inner core of the terminal according to the polarity and silkscreen.
   5) Lower the terminal clamp (yellow) and pull the cable outward to make sure it is tight.
   6) Rightward tighten the gland nut.

Note: If it is a solid wire, please set aside the outer wire skin by 90~100mm to facilitate the wiring operation.

©Dyness reserves the copyright of this document.

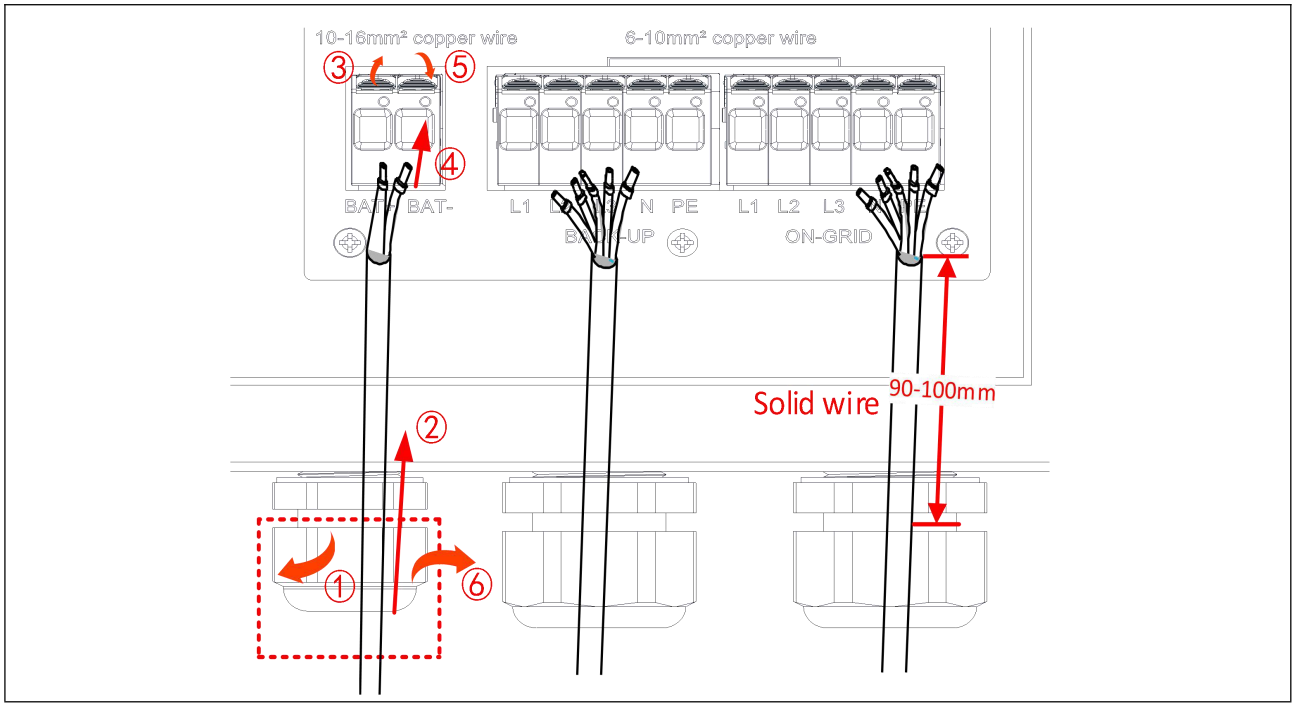

5.5 Communications Connection

- Communication interface board external schematic

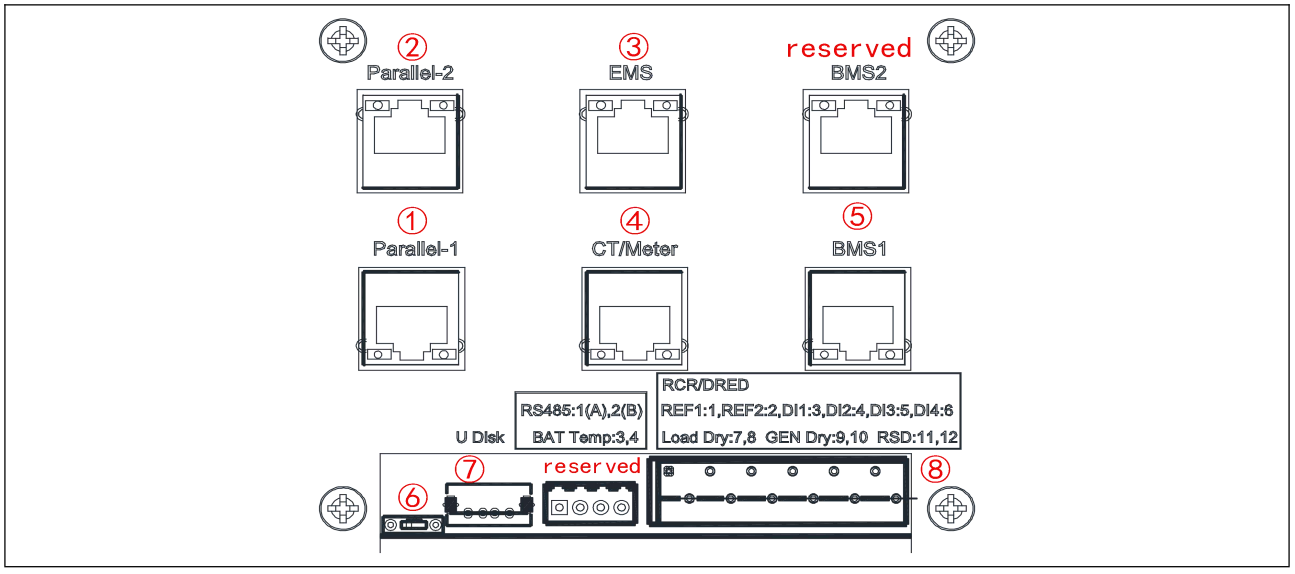

- External interface definition

No.	Label	Function	Connection method
1	Parallel	Parallel communication interface (CAN communication)	Standard network cable
2	Parallel	Parallel communication interface (CAN communication)	Standard network cable
3	EMS	485 communication interface (Modbus) to connect to	Standard

©Dyness reserves the copyright of this document.

		a host computer or third-party device	network cable
4	CT/Meter	Internal meter CT interface / communication interface for external meter (RS-485)	Standard network cable
5	BMS1	Battery communication interface (CAN communication)	Standard network cable
6	Parallel RES	Parallel CAN termination resistor 120Ω	Dip switch
7	U Disk	Updating the inverter program using a USB flash drive; local data exports	USB flash drive
8	RCR/DRED: 1-6	The interface of the inverter to the grid output power control, DRED and RCR function multiplexing. European safety standard is RCR; Australian safety standard is DRED.	Outdoor Copper Cable
	Load Dry: 7,8	Load Control Dry, connect dry contact signals for load control. Max24Vdc 1A	
	GEN Dry: 9,10	GEN_Start_Dry, Connect the generator and control start/stop. Max24Vdc 1A	
	RSD: 11,12	Remote Shutdown, One-touch shutdown of control devices.	

5.5.1 BMS communication

- BMS communication line pin definition

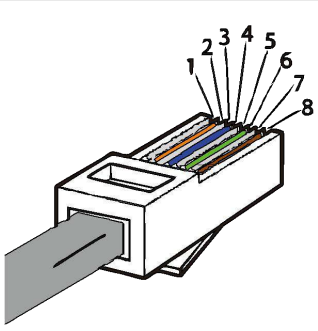

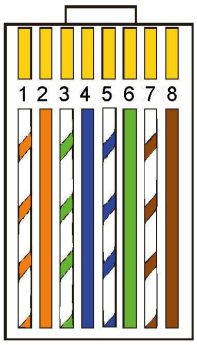

1) White with orange stripes
2) Orange
3) White with green stripes
4) Blue
5) White with blue stripes
6) Green
7) White with brown stripes
8) Brown

1	2	3	4	5	6	7	8
none	none	none	BMS_CANH	BMS_CANL	none	none	none

- BMS Communication procedures

The inverter supports **automatic recognition of battery communication protocols**.

1. If the battery used is on the inverter's support list, the communication protocol will be recognized and connected automatically after the communication cable is plugged in for the first time.
2. If the first connection is unsuccessful, or if you need to replace the battery after the first connection, you can manually select the communication protocol, or you can click Auto Scan again to automatically scan the battery.

The operation steps are as follows:

©Dyness reserves the copyright of this document.

Step1	Step2
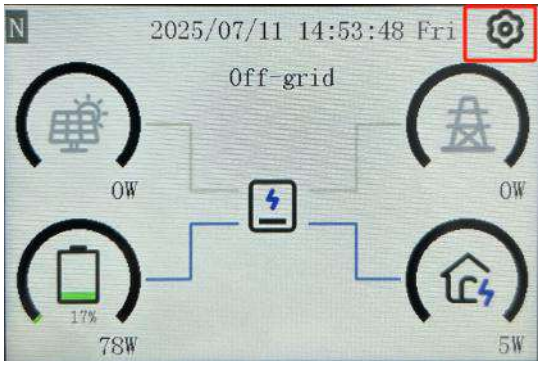	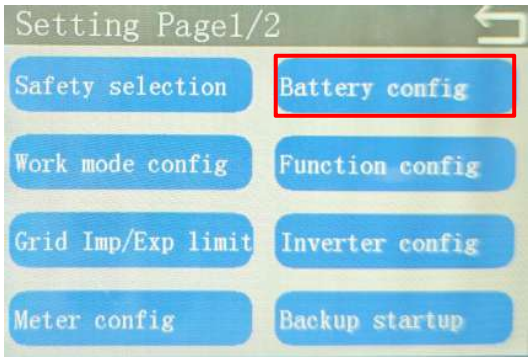
Step3 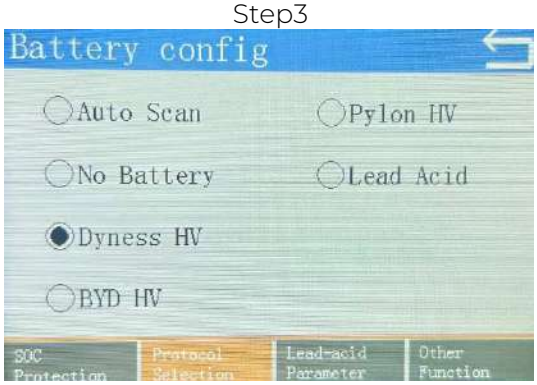	

- Explanation of functions in the "Battery config" interface

“SOC Protection” interface	1,3: The max SOC at which battery charging is permitted in the “On-grid/Off-grid” mode. 2,4: The min SOC at which the battery is allowed to discharge in the “On-grid/Off-grid” mode. If the SOC is lower than this value, discharging is not permitted.
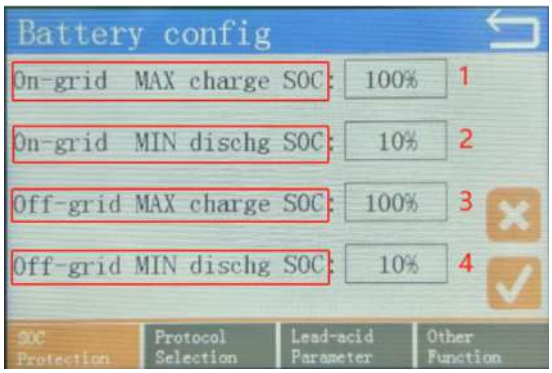	
“Other Function” interface	Activate Battery: Battery activation function. When the battery is completely drained, and when there is PV energy, this function can be used to activate the battery.

©Dyness reserves the copyright of this document.

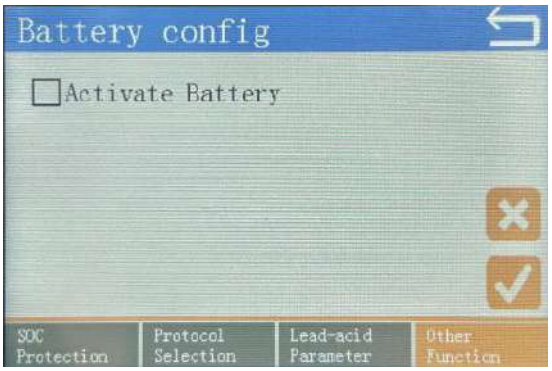

5.5.2 EMS communication

- EMS communication cable pin definition

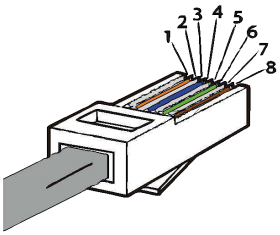

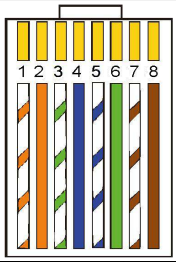

1) White with orange stripes
2) Orange
3) White with green stripes
4) Blue
5) White with blue stripes
6) Green
7) White with brown stripes
8) Brown

1	2	3	4	5	6	7	8
EMS_485_A	EMS_485_B	none	none	none	none	none	none

- EMS Communication Function Description

1. When used as a stand-alone device, external monitoring can be achieved through this interface.
2. When used in a parallel, this interface can jointly achieve the monitoring of both the master device and the slave device.

Note: EMS port adopts Modbus protocol format, if you need to control the inverter in depth, please contact the after-sales staff to get the Modbus protocol document.

5.5.3 CT/Meter Communication

- CT/Meter communication cable pin definition

1	2	3	4	5	6	7	8
IL1-	IL1+	IL3 -	IL2 -	IL2+	IL3+	METER_485_B	METER_485_A

Note: CT/Meter communication cable requires standard network cable of category 6 and above (category 7 cable is recommended). If the length of the connecting cable between the inverter and CT is more than 30m, an optional external metering meter is available. If you want to continue to use CT, you can contact the after-sales service to confirm.

5.5.3.1 Internal meter

- Connection diagram of internal meter（standard package）

©Dyness reserves the copyright of this document.

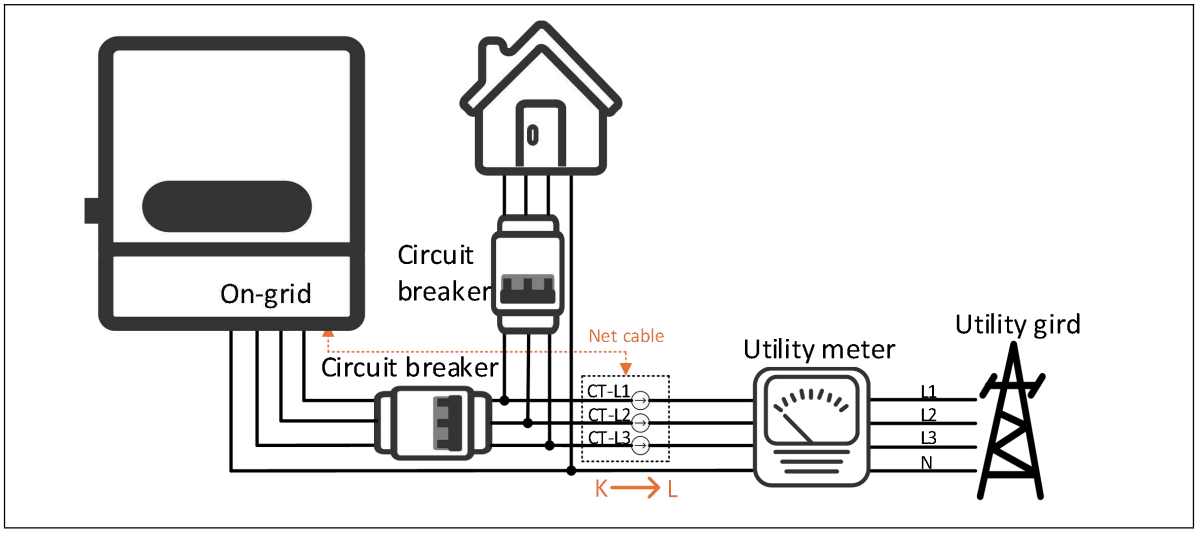

- Internal meter communication procedure

If using the internal meter, use the CT supplied with the accessory package and snap it correctly onto L1, L2 and L3 respectively. Connect one end of a standard network cable to the CT connector end and the other end to the communication connector end. The CT schematic is as follows:

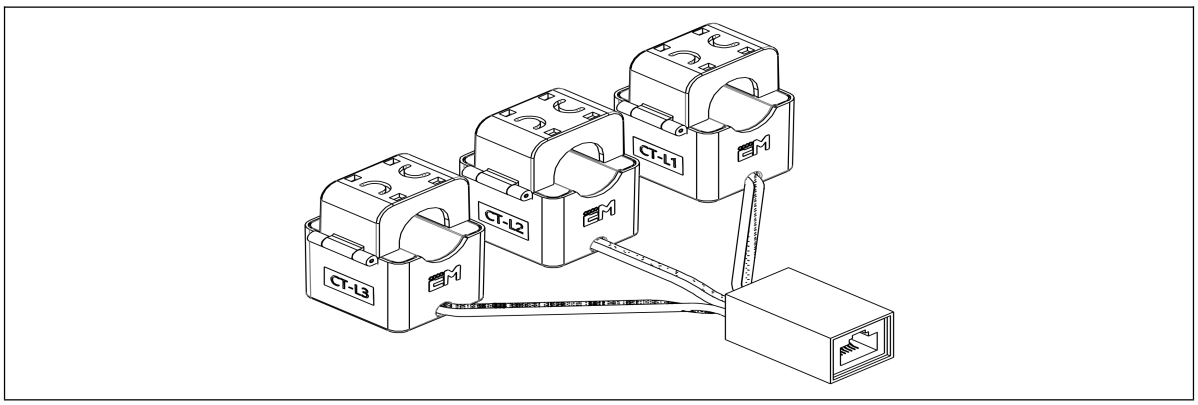

Note:

1. If you cannot identify the L1/L2/L3 phase sequence inside the distribution box, you do not need to install the CT clamps in sequence. However, ensure the three CT clamps are fitted onto the three live wires; the inverter is equipped with an AI self-correction function.
2. The AI self-test and AI self-correction f unctions are only compatible with the internal meter, and do not support the external meter.
3. The AI self-check and self-correcting function can only be initiated after the inverter is powered on and the CT wiring is completed.

- CT_AI self-test function

When CT wiring is completed, please use the CT_AI self-test function. For the complex wiring environment, this function can help users to determine whether the wiring is correct or not, as well as error alerts.

- CT_AI self-correcting function

When the CT self-test is completed, if there is an error, this function can help the user to avoid manual adjustment, directly AI self-correction

Note:

©Dyness reserves the copyright of this document.

1. The prerequisite for AI self-correction is that the three CT clamps must be clipped onto the three live wires. Reversed CT mounting direction and incorrect phase sequence are acceptable.
2. After AI self-correction, the installer does not need to manually adjust the CT position. The system will auto-correct the CT direction and continue to work normally, but the correction result will have AI prompts.

- The procedure for CT_AI self-test and CT_AI self-correction is as follows:

1. After the detection is completed, it will show whether the direction and connection of CT are correct or not and prompt an error message.
2. At this time, users can choose to manually adjust the direction of CT snap or snap line sequence in the distribution box and then re-detect; or directly click AI correct, and the corrected result will indicate **"AI correct"**.
3. Refer to the steps shown in the following picture. In step 5, it can be seen that the installation direction of the CT is incorrect. However, at this point, the installer does not need to re-adjust the direction of the CT. Instead, by using the **"AI correct"** function, the software can complete the adjustment, allowing the system to function normally.

<table>
<tr><td>Step1
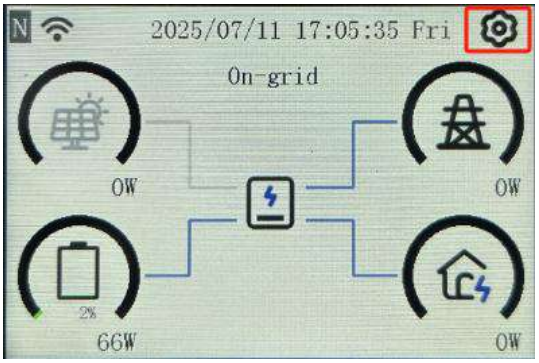
</td><td>Step2
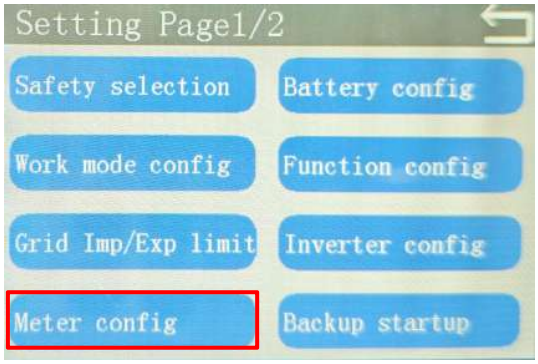
</td></tr>
<tr><td>Step3
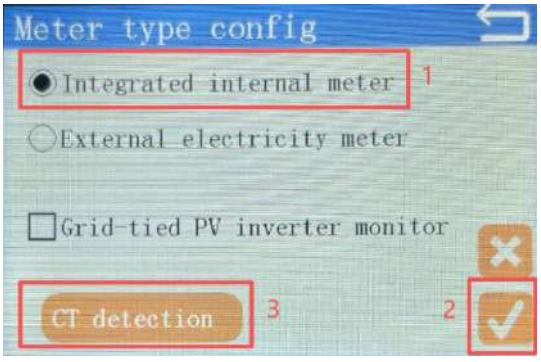

1. Select meter type
2. Click "√"
3. Click "CT detection"</td><td>Step4
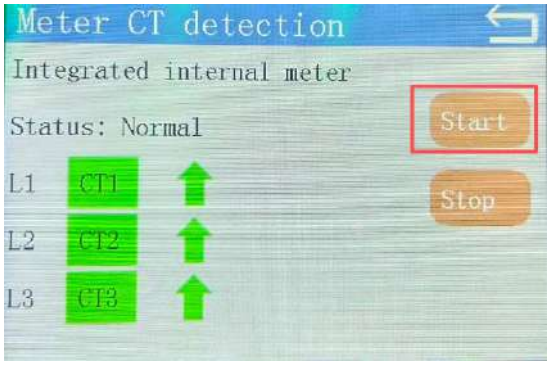
</td></tr>
<tr><td>Step5</td><td>Step6</td></tr>
</table>

©Dyness reserves the copyright of this document.

<table>
<tr>
<td>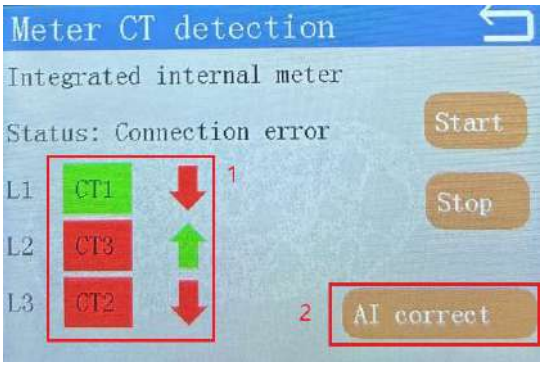

1. See error message
2. Click “AI correct”</td>
<td>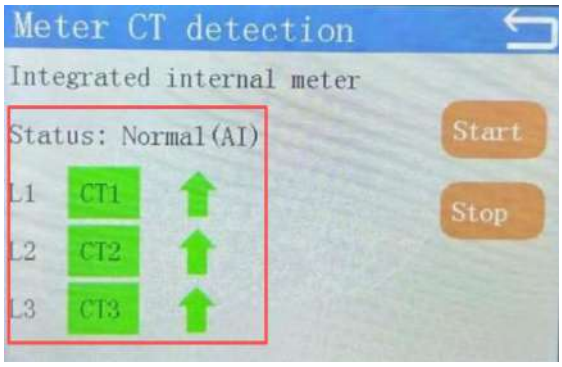

You can see the results after "AI correct"</td>
</tr>
</table>

5.5.3.2 External meter

- External meter connection schematic（optional）

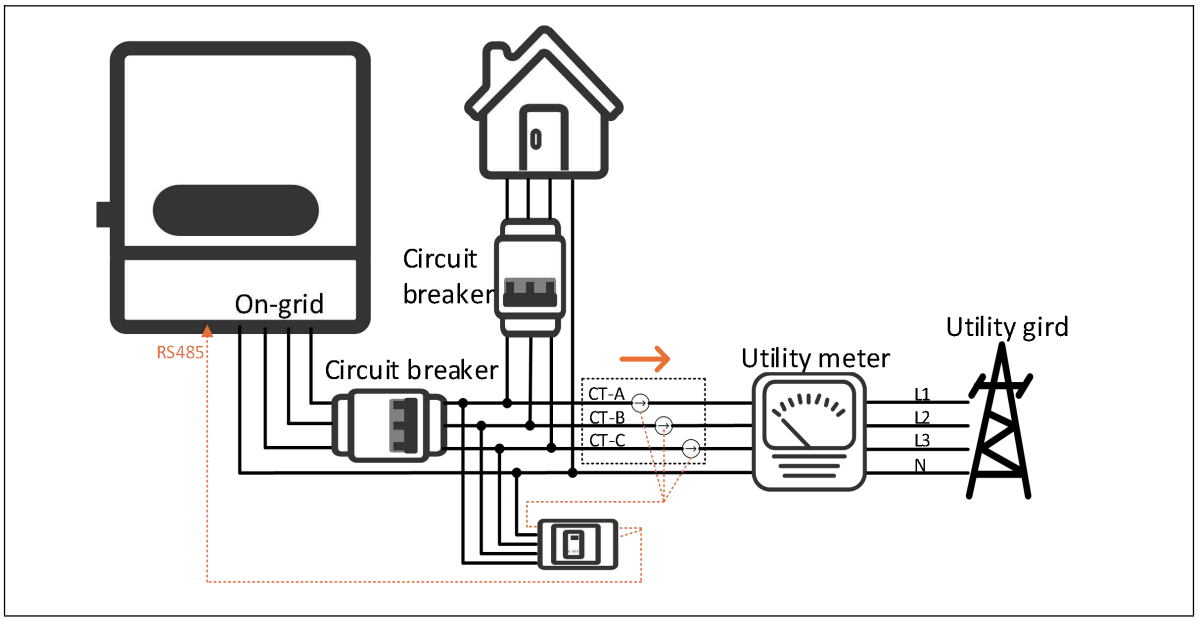

- Components of the external electricity meter accessory package

Part1	External meter
Part2	Plug-in terminal
Part3	CT
Part4	2pin to RJ45 socket
Part5	RJ45 splitter adapter

©Dyness reserves the copyright of this document.

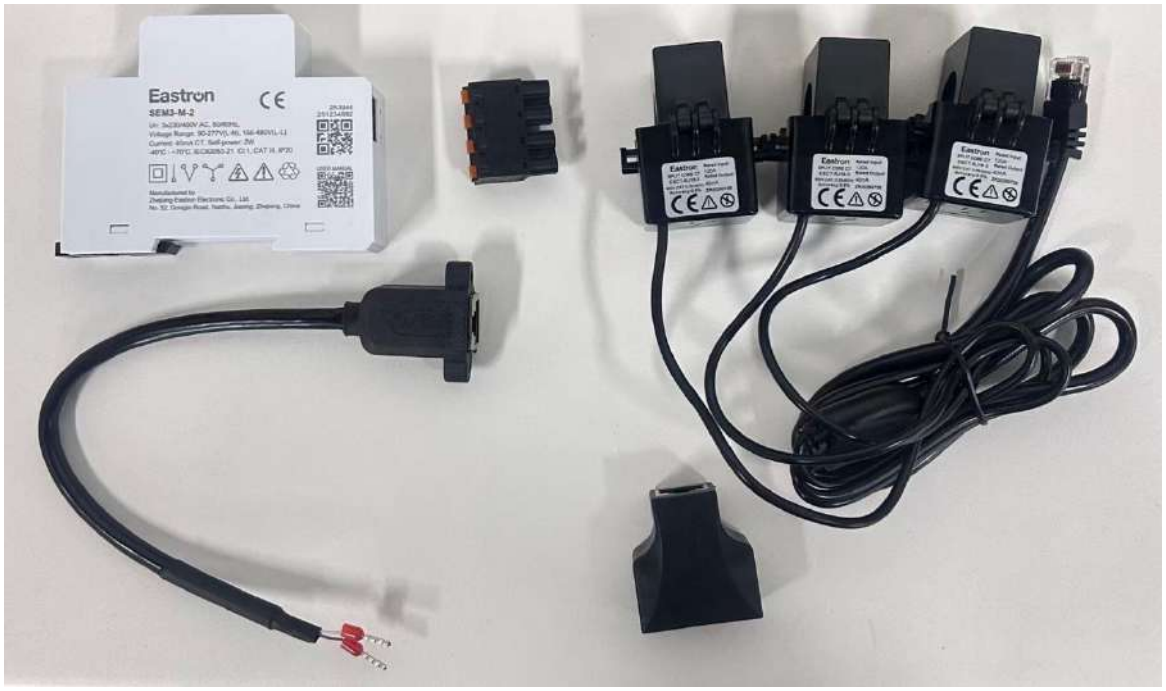

2pin to RJ45 socket：





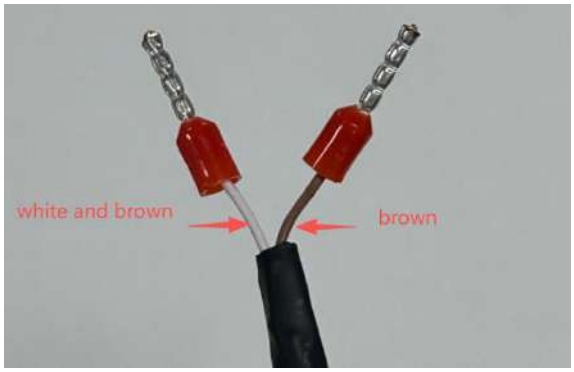

- External Meter Communication Procedures

1. According to the wiring diagram, connect the output terminals of the Breaker to the L1, L2, L3 and N terminals of the external electricity meter.
2. Take out the “CT”, and insert the crystal head into the "CT" interface of the electricity meter.

©Dyness reserves the copyright of this document.

3. Take out the “2pin to RJ45 socket”, Connect the signal lines (white-brown, brown) to the “B- and A+” terminals of the electricity meter respectively.
4. Prepare a standard network cable. Connect one end to the “2pin to RJ45 socket”, and the other end to the CT/Meter RJ45 port of the inverter.

Note: Follow the above instructions, if there is still a problem, please contact customer support.

- The wiring diagram is as follows

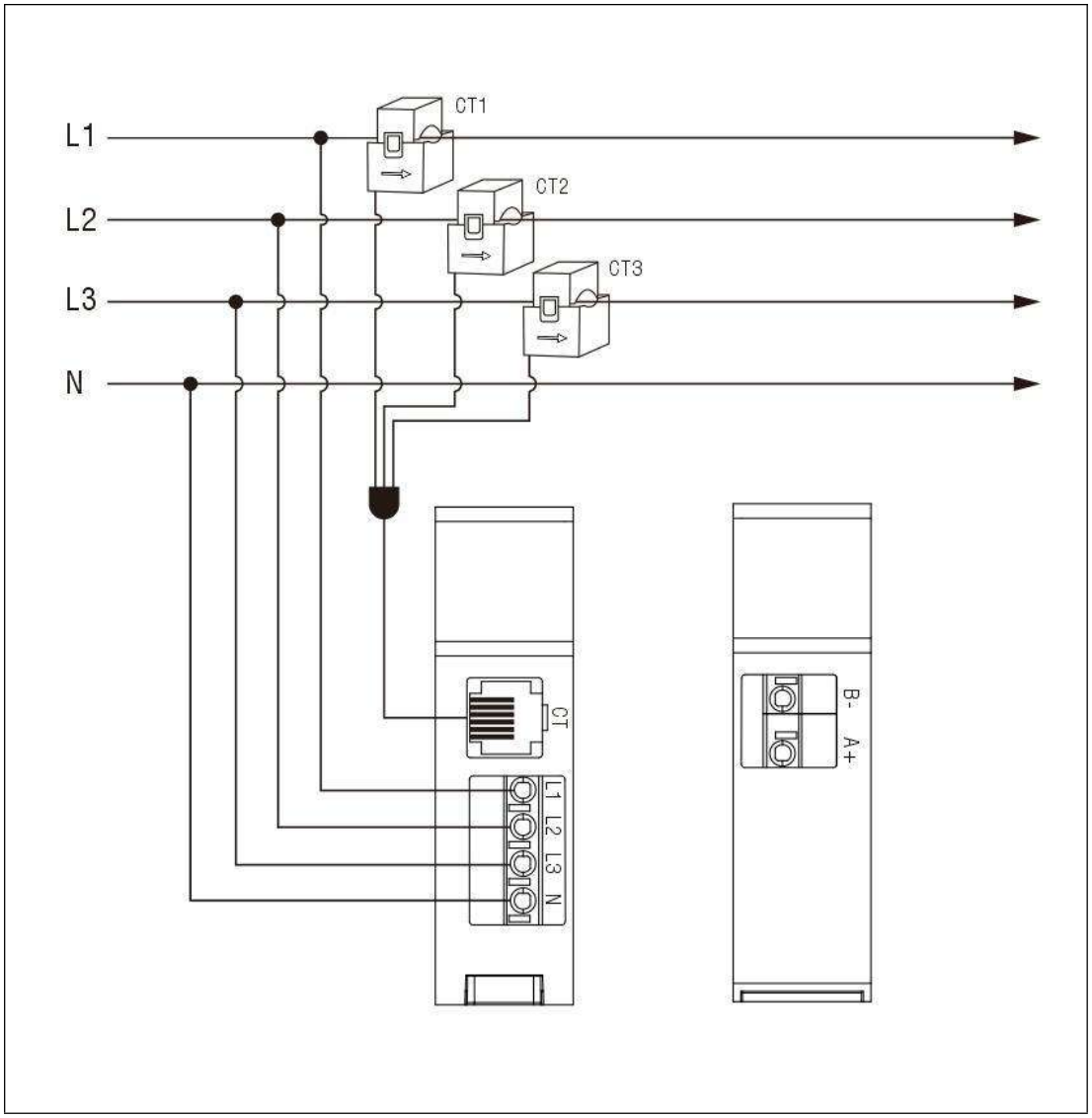

5.5.3.3 AC coupled electricity meter monitoring

- If the user has another PV generation device and wants to monitor the operation data of both devices together, the hybrid inverter supports the **"AC coupled"** function to help the user achieve this goal. This function is highly suitable for scenarios where there is already a “Grid-tied PV Inverter”.

Note: The "AC coupled" only supports one monitoring scheme. The Hybrid Inverter uses the “Internal meter”, while “Grid-tied PV Inverter” uses the “External meter”. The device used for monitoring "Hybrid Inverter" can only be “CT in the package”, while the equipment used for

©Dyness reserves the copyright of this document.

monitoring "Grid-tied PV Inverter" can only be the electricity meter. The connection method is illustrated in the following diagram.

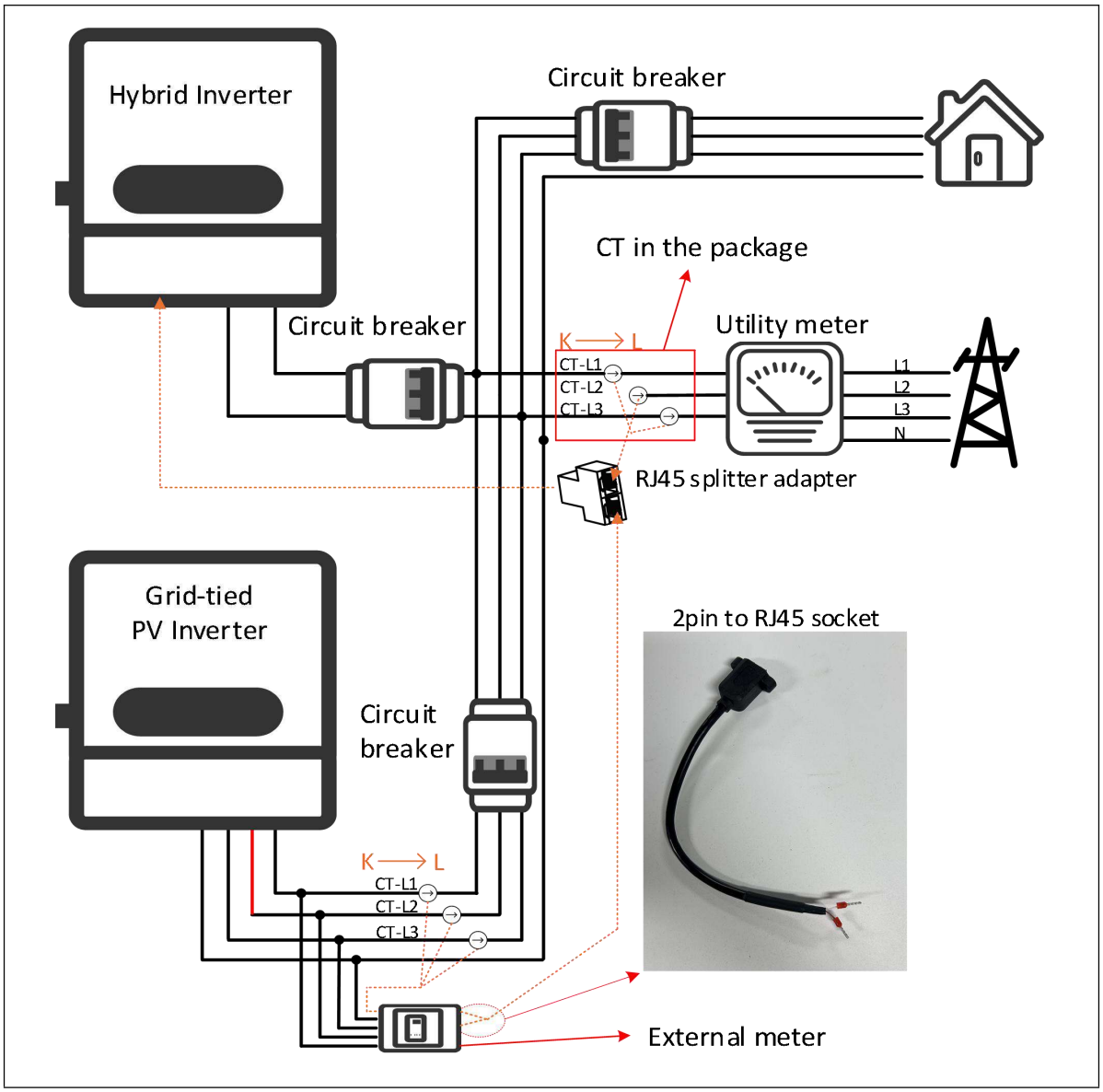

- Setting operations and monitoring display

After completing the wiring as shown in the above figure, the setting procedures are as follows

©Dyness reserves the copyright of this document.

<table>
<tr>
<td>Step1
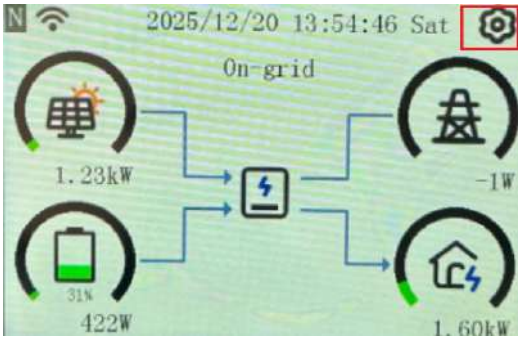
</td>
<td>Step2
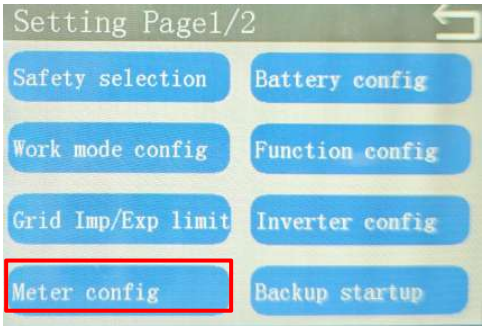
</td>
</tr>
<tr>
<td>Step3
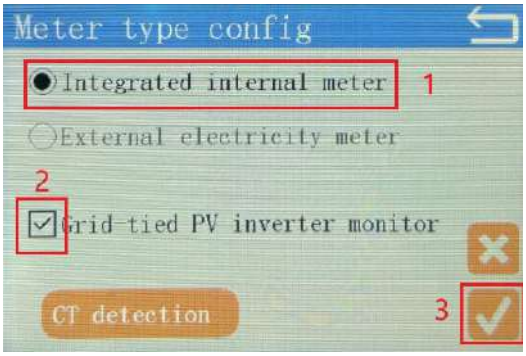

1. Select “Integrated internal meter”
2. Select “Grid-tied” PV inverter monitor
3. Click “√”</td>
<td>Step4
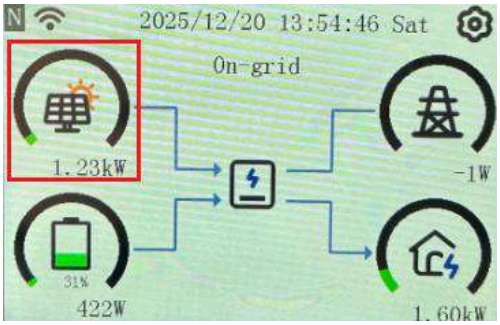

After setting is completed, return to the homepage and click this icon.</td>
</tr>
<tr>
<td>Step5
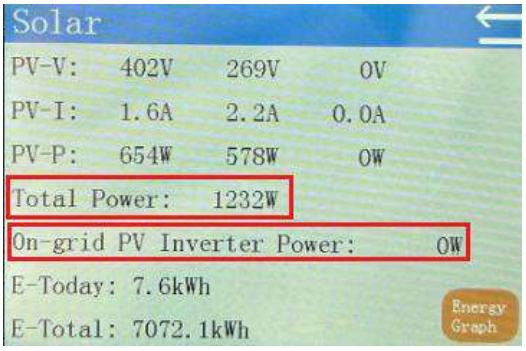

“Total power” and”On-grid PV Inverter Power” will be displayed separately.</td>
<td></td>
</tr>
</table>

5.5.4 DI/DO Communication

- DRED/RCR

The inverters are compliant with Australian DRED standards and provide a separate DRED signal control port. In Germany and some European regions, grid companies use RCR to convert grid

©Dyness reserves the copyright of this document.

dispatch signals to dry contact transmission, and power plants receive grid dispatch signals via dry contact.

- DI/DO Communication Interface Definition

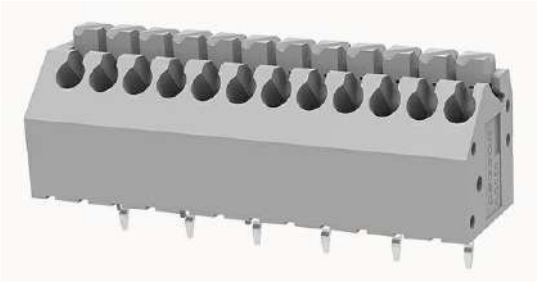

From left to right: Pin1、Pin2.....Pin12

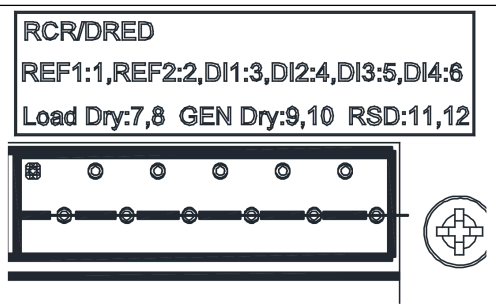

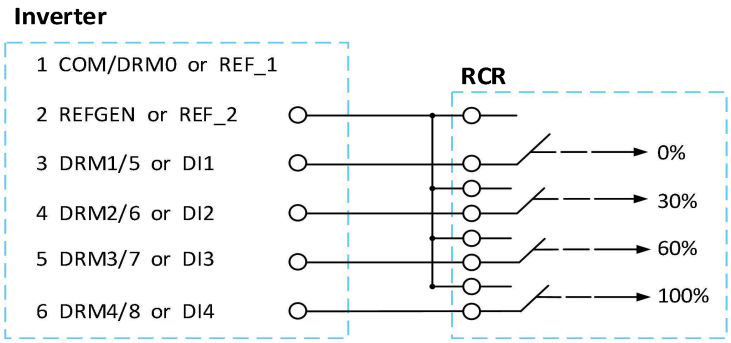

1	COM/DRM0 or REF_1
2	REFGEN or REF_2
3	DRM1/5 or DI1
4	DRM2/6 or DI2
5	DRM3/7 or DI3
6	DRM4/8 or DI4
7	DRY_RLY3_OUT+
8	DRY_RLY3_OUT-
9	DRY_RLY2_OUT+
10	DRY_RLY2_OUT-
11	IO_IN1_O
12	GND-S

- DI/DO function operation steps

1. The cables are accurately connected according to the silk-screening marks.
2. "DRED, RCR, Remote shutdown" are within the scope of DI/DO functions.

Note: Load and generator control functions are not available at this time.

The operation steps are as follows:

©Dyness reserves the copyright of this document.

Step1

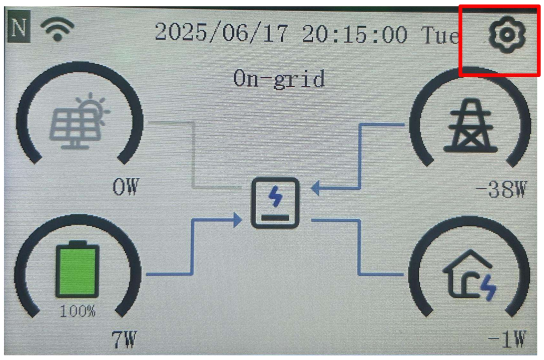

Step2

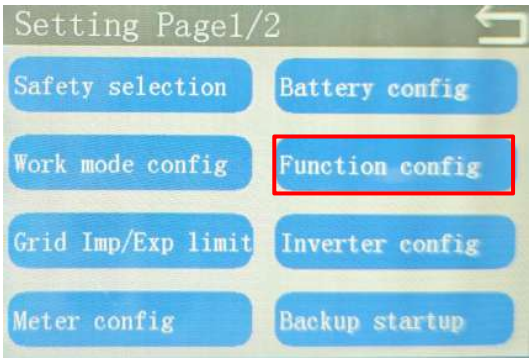

Step3

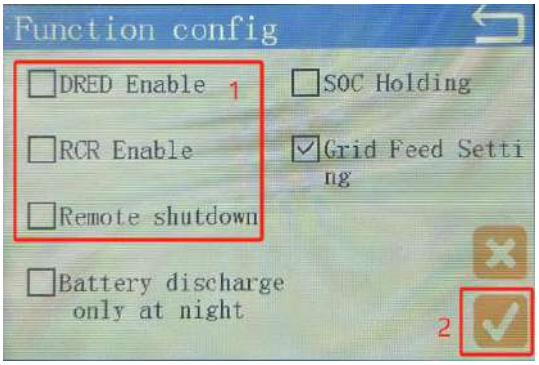

1. Click on any one of the three functions.
2. Click "√"

5.5.5 Module Communication

- **Functional Description**

The inverter communication module supports **WiFi, Bluetooth, LAN** communication mode, connecting to cell phone or WEB enumeration, which is used to set up the inverter related parameters, view the operation information, error information, and understand the system status in time. For specific operation, please refer to the attached communication module user manual.

Module	Main Difference
	Support **WiFi, Bluetooth, LAN** communication; IP65

- **Monitoring Module Installation Procedure**

1. Remove the dust cover of the communication module interface.
2. Insert the communication module.
3. Right turn the communication module buckle, make sure it is not loosened.

©Dyness reserves the copyright of this document.

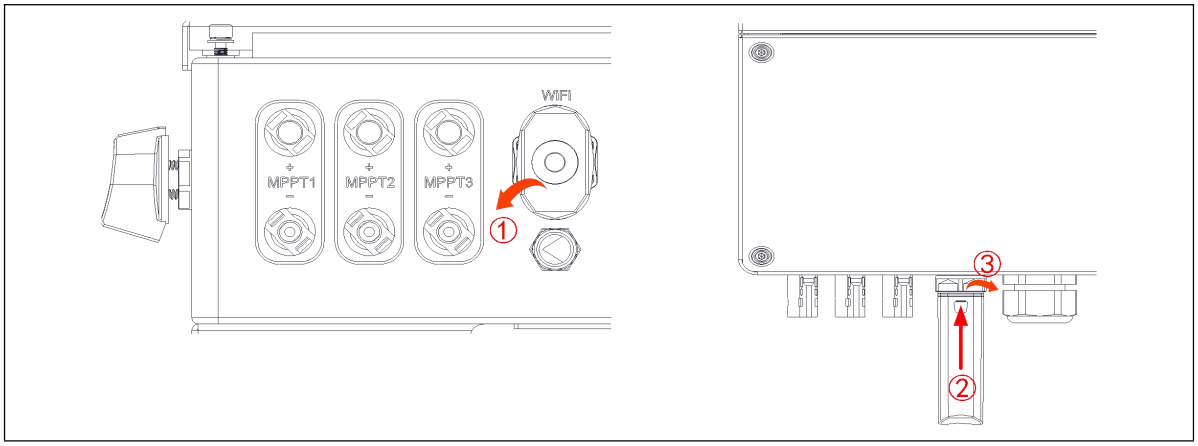

5.5.6 Communication cable wiring procedure

- To crimp the **tubular signal terminals**, proceed as follows:

Step 1: Using an hexagon socket tool, remove the lower case cover, unscrew the communication glands, and thread the communication cables.

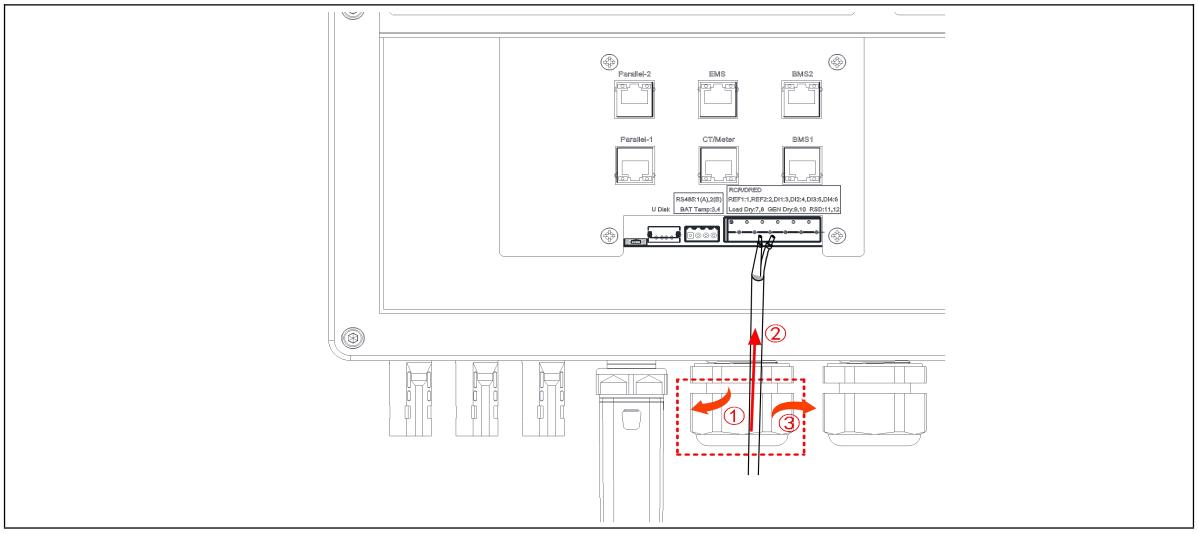

Step 2: Using wire strippers, pivot the wire 6-8mm.

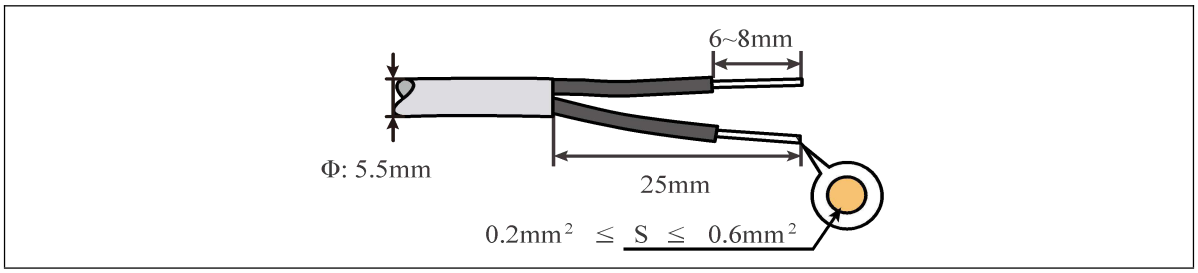

Step 3: Thread the cable into the signal tubular terminal of the accessory package and crimp using tubular terminal crimping pliers.

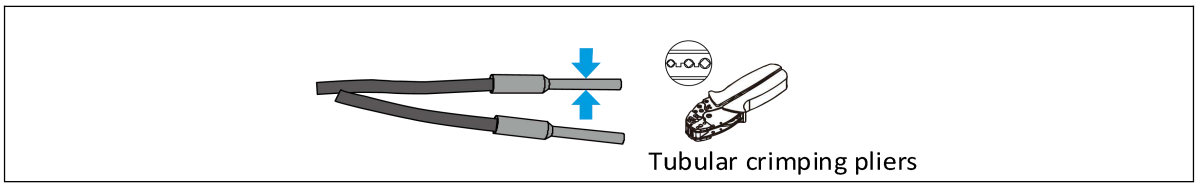

©Dyness reserves the copyright of this document.

Step 4: Use your finger or a small screwdriver to press down on the position shown in the illustration, then insert the terminal and release the screwdriver to snap it into place, tugging it outward to ensure that it snaps into place.

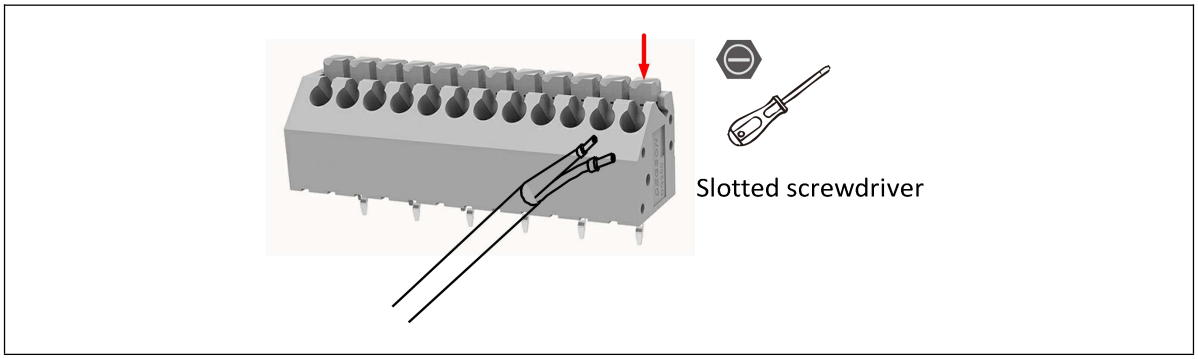

Step 5: Tighten the communication glands as illustrated in step 1

- The standard network cable crimping procedure is as follows:

Step 1: Same as Tubular Signal Terminal Crimp Step 1.

Step 2: Set aside 15mm of the outer insulation of the standard network cable, set aside 6-8mm at one end of the cable, insert the crystal head and use the standard crimping pliers to crimp the cable.

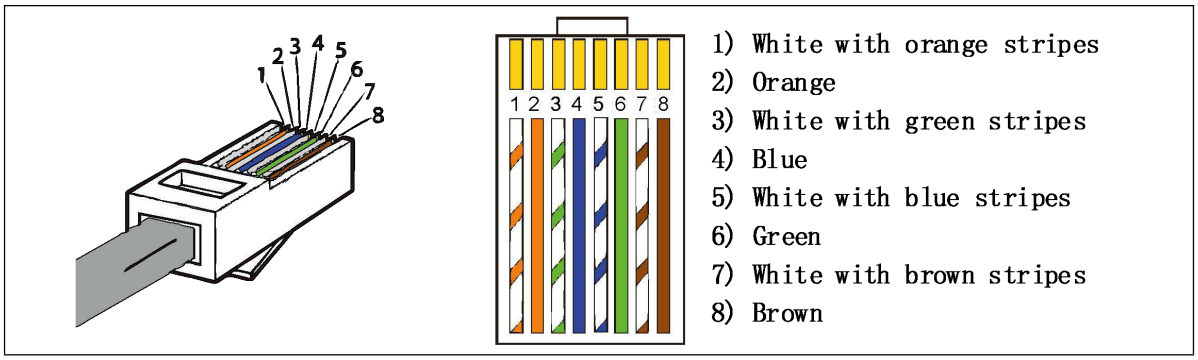

Step 3: Plug in the corresponding communication interface.

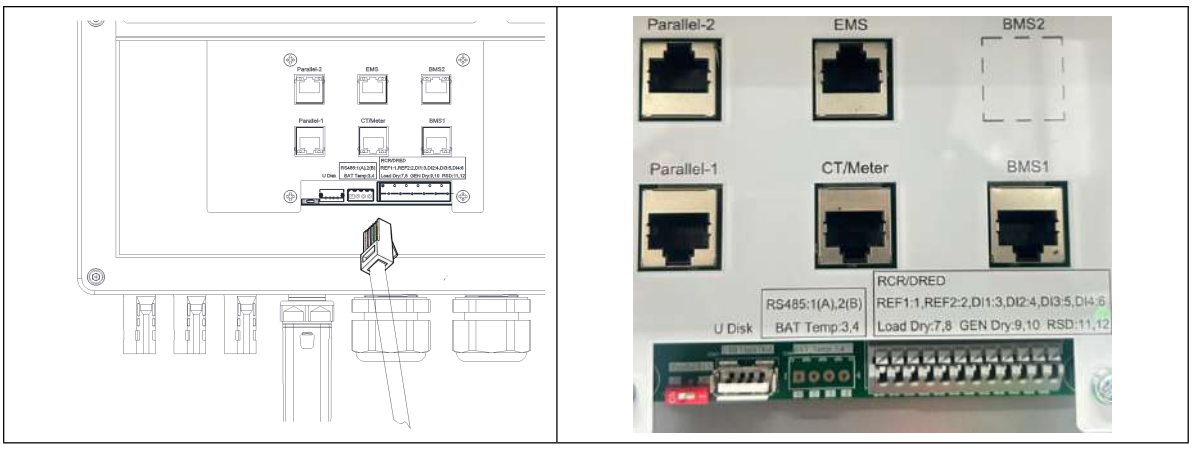

Step 4: Same as Tubular Signal Terminal Crimp Step 5

©Dyness reserves the copyright of this document.

6. Commissioning

6.1 Local LCD Commissioning

- **Pre-power-up check**

⚠	1. Ensure that the grounding cable is reliably grounded. 2. Ensure that the inverter is installed reliably and firmly. 3. Make sure all circuit breakers are in OFF state. 4. Ensure that the PV, battery, AC and communication cables are connected reliably and securely with correct polarity. 5. Wait a minimum of 5 minutes to discharge internal capacitors before any disassembly or internal service work.

- **If the check is complete, follow the steps below to start the inverter for the first time**

1. Close the grid-side circuit breaker.
2. Close the Backup side circuit breaker.
3. Close the battery side circuit breaker
4. Turn PV Switch to ON

Note: See section 3.3 for **indicator status** after startup

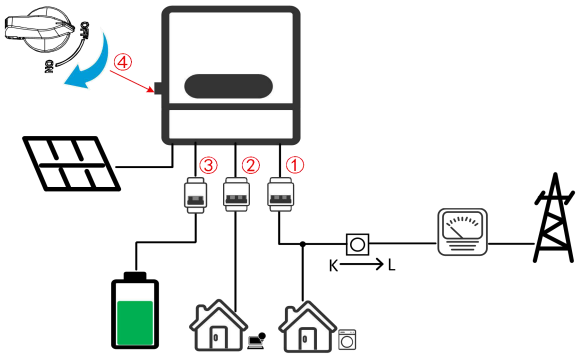

- **The inverter supports installation self-test, which is convenient for installers**

1. LCD setting interface→Page2→Installation check→Quick start→Start→Display self-test results
2. Before starting the installation self-test, the LCD will display a message prompting the installer to confirm the installation and connection of PV, battery, AC, communication, CT, and modules.
3. After the self-test is completed, the LCD will display the **test results, abnormal events, and events that need to be confirmed**, and display them one by one to the installer on the subsequent page.

Step1	Step2
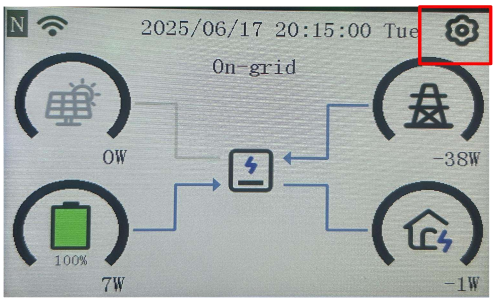	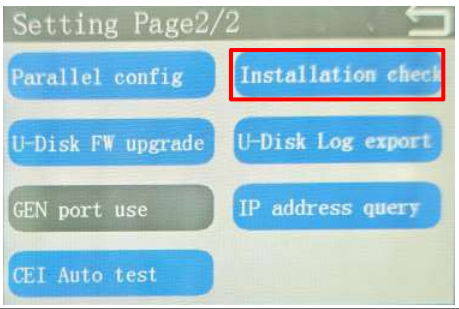
Step3	Step4

©Dyness reserves the copyright of this document.

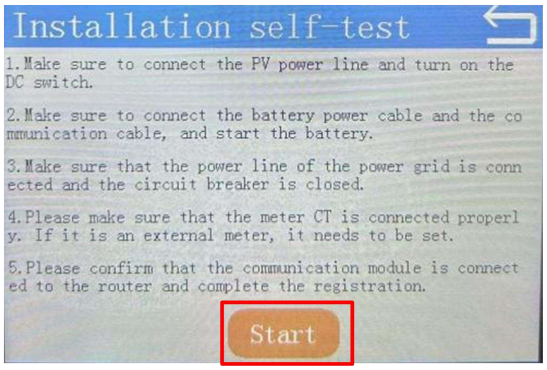

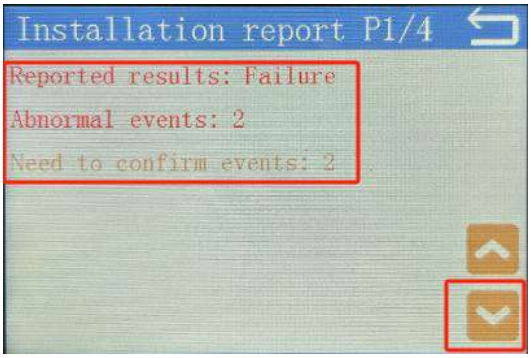

Step5

Step6

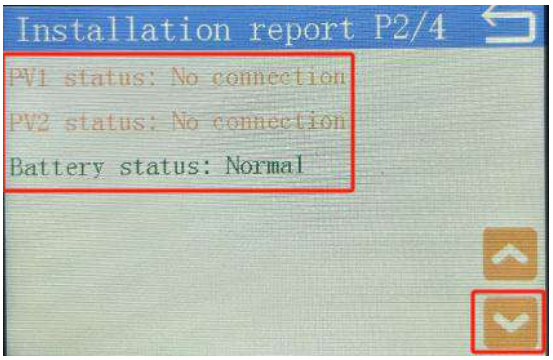

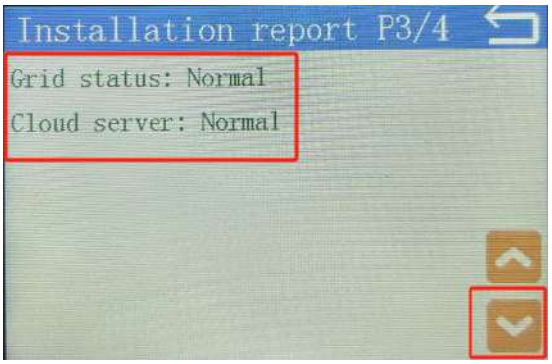

Step7

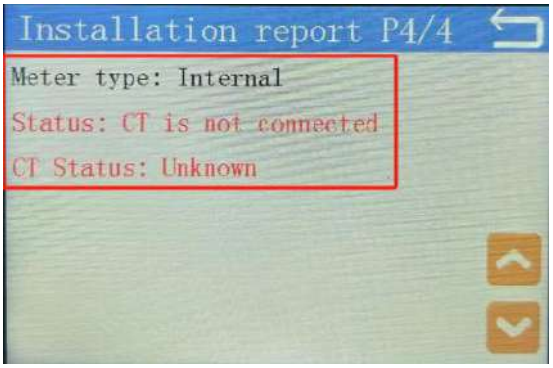

- If the inverter needs to be powered down, follow these steps:

1. Disconnect the grid-side circuit breaker.
2. Disconnect the Backup side circuit breaker.
3. Disconnect the battery side circuit breaker
4. Turn PV Switch to OFF

©Dyness reserves the copyright of this document.

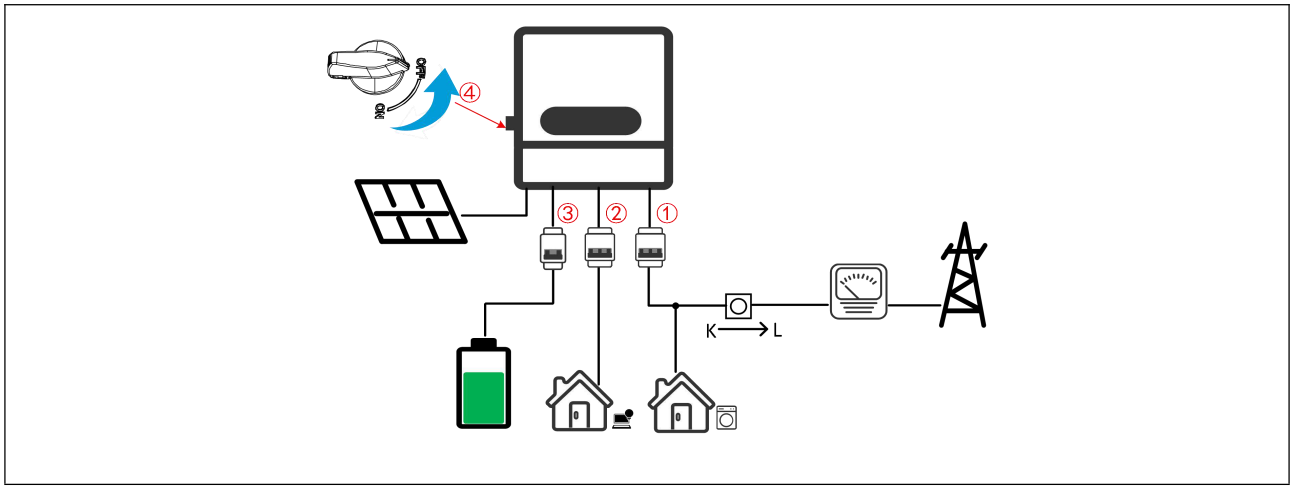

6.2 Firmware upgrade and data export

- **Local USB flash drive upgrade steps**

1. Contact the after-sales service to get the software upgrade package.
2. A USB drive needs to be prepared and it should meet the following requirements:

(1) The file system of the USB drive should be formatted as FAT32, and the recommended sector size is 4K bytes;

(2) Create a folder named "NextreeBin" in the root directory of the USB drive;

(3) Copy the target firmware to the "NextreeBin" folder. Multiple firmware files can be placed in this folder simultaneously, and they can be selected on the LCD screen;

3. Adjust the inverter status to standby waiting mode (grid only or battery only or PV only).
4. Insert the USB flash disk into the interface.
5. LCD main interface displays the icon of USB flash disk, which means it is recognized successfully, and vice versa means it is not recognized.

- **Support the function of exporting running logs from U disk, and you can choose to export different time periods.**

Operation is as follows:

1. LCD setting interface→Setting Page2→U-Disk Log export→Select the time period to be exported→Export

2. LCD setting interface→Setting Page2→U-Disk FW upgrade→Select the software from U-Disk→upgrade

Step1	Step2
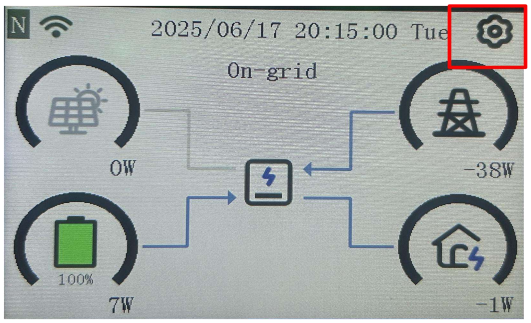	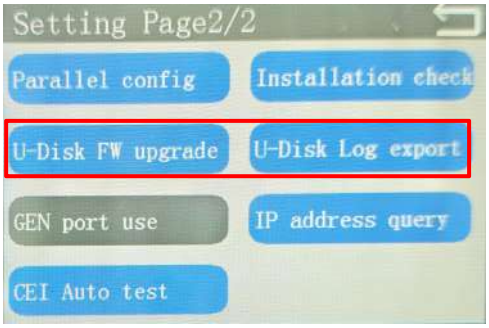

©Dyness reserves the copyright of this document.

Step3	Step4
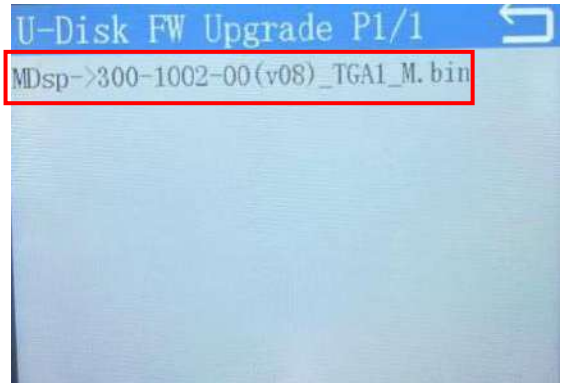	

6.3 APP Remote Commissioning

This manual introduces the main steps for remote monitoring using the Dyness App. For detailed usage information, please refer to the "Dyness App User Manual." To obtain by scanning the QR code:

6.3.1 App Registration and Login

TIPS
• Please be reminded that the country or region MUST match where you live. An incorrect country or region may cause failure of device connection. • For end customer, please select Owner when registering. For installer and dealer, please select Partner.

©Dyness reserves the copyright of this document.

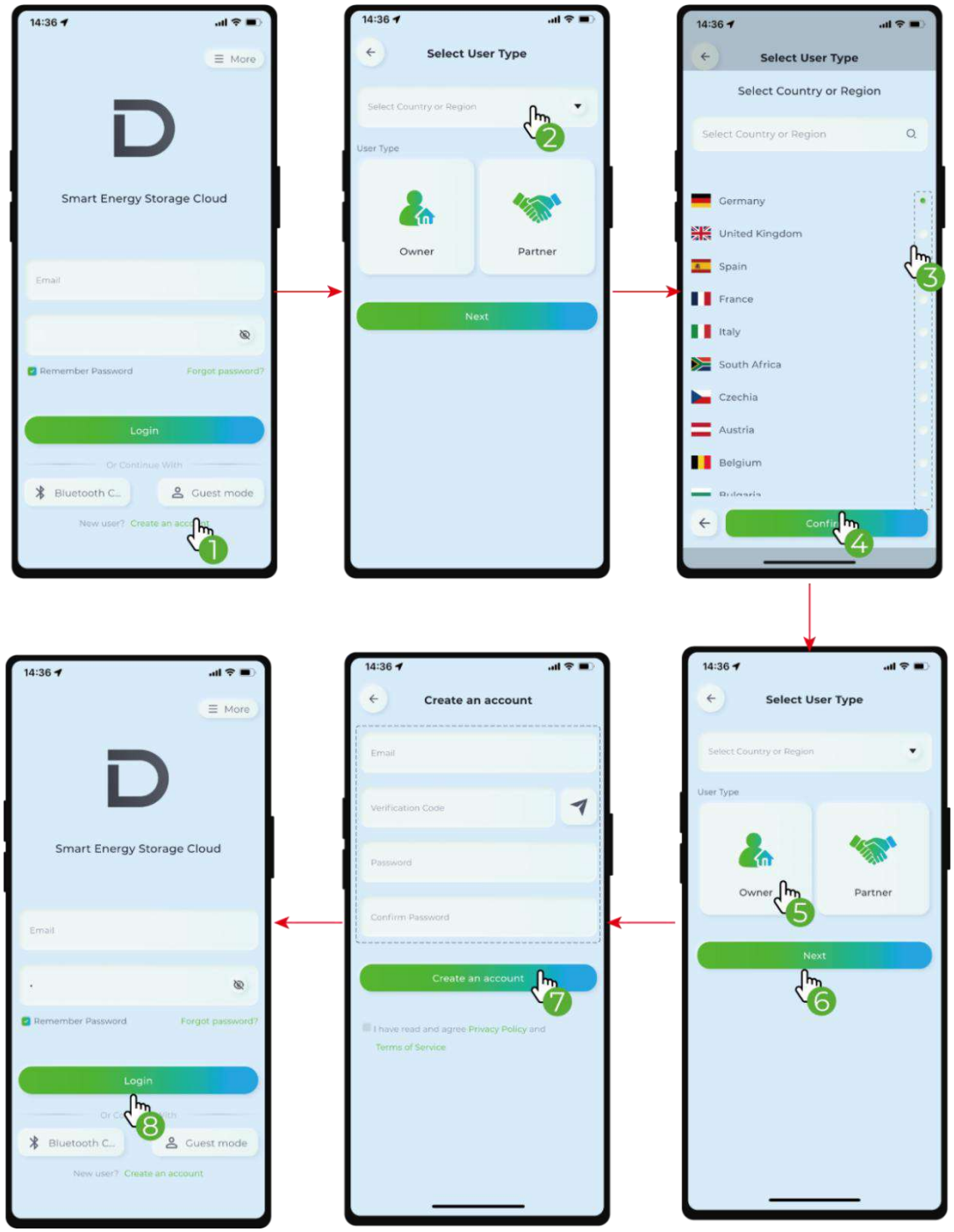

6.3.2Inverter Network Configuration

Add HT-A and connect it to your home router Wi-Fi network.

©Dyness reserves the copyright of this document.

TIPS

If you encounter Wi-Fi connection issues, try the following:

- Confirm that your Wi-Fi router is working normally.
- Move your router closer to HT-A.
- Confirm that the Wi-Fi password is correct.
- Ensure the router's wireless network is set to the 2.4 GHz frequency band.

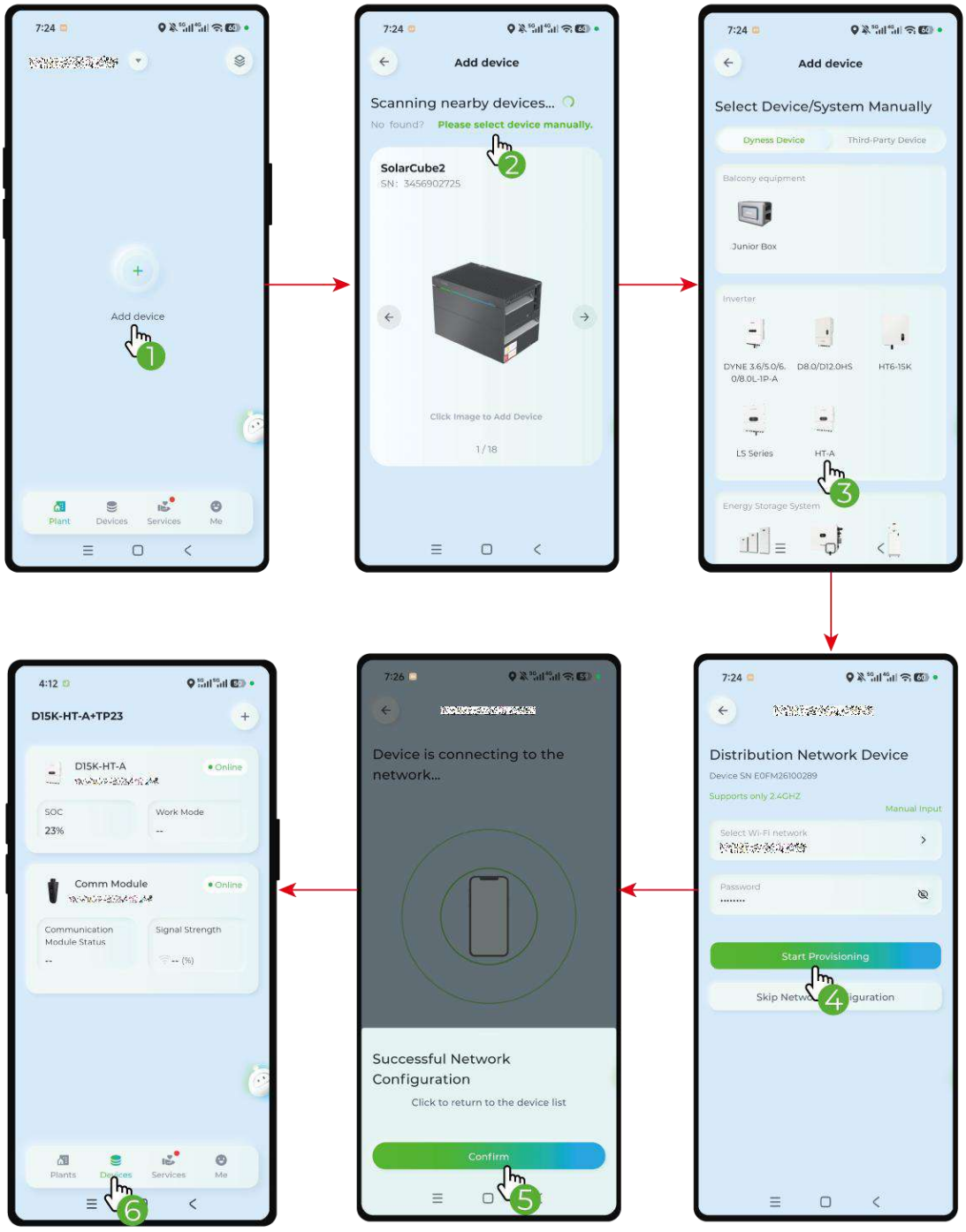

©Dyness reserves the copyright of this document.

6.3.3Adding Devices

You can add Dyness devices and third-party devices to your HT-A as required.

TIPS
You can add a device by selecting the scanned device SN, scanning the device QR code, or entering the device SN manually.

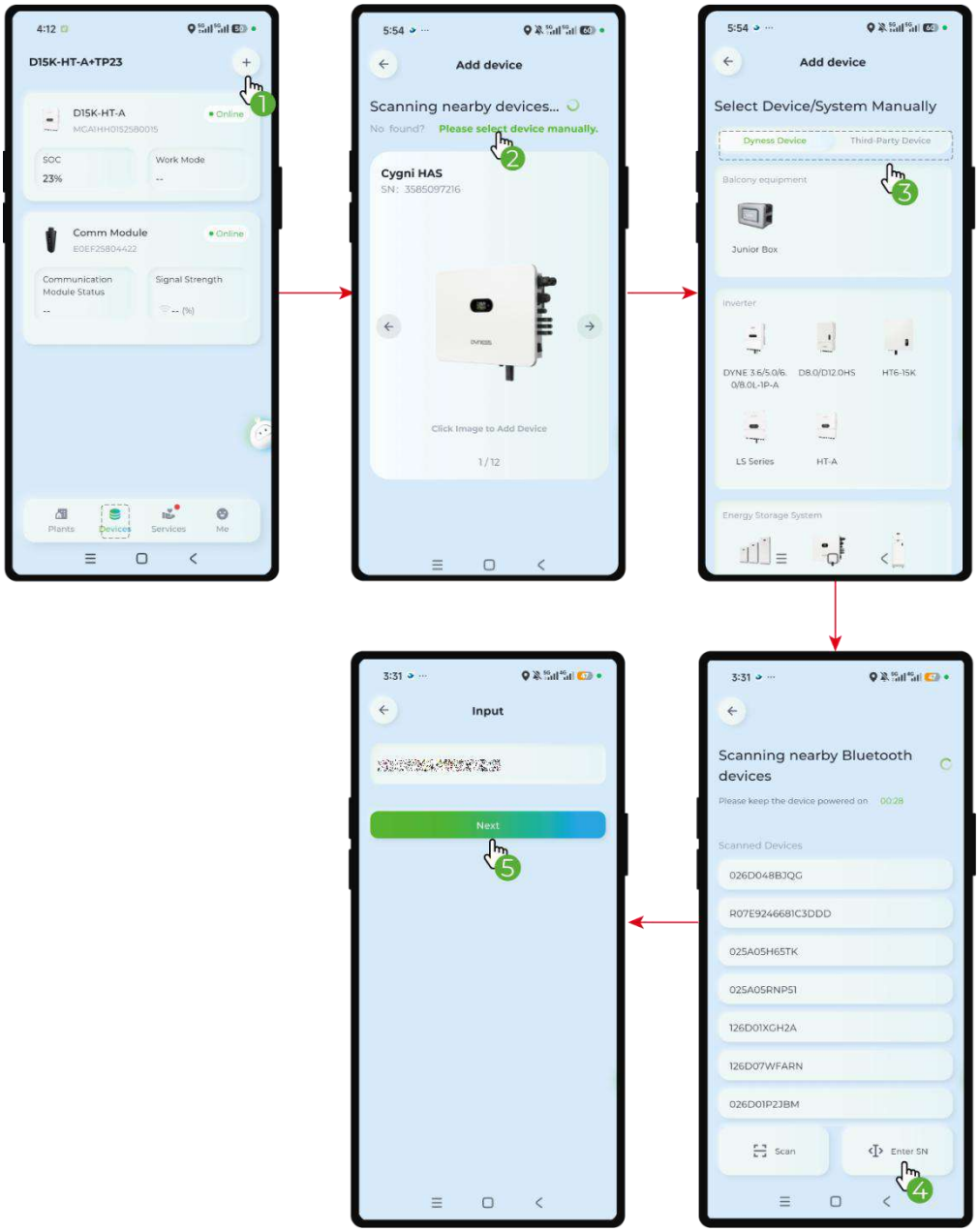

©Dyness reserves the copyright of this document.

6.3.4Operating Modes

TIPS
For detailed descriptions of each operating mode and corresponding parameters, please refer to section 3.6.

6.3.4.1Self Consumption Mode

6.3.4.1.1Grid Outage-Never

- Mode Setting

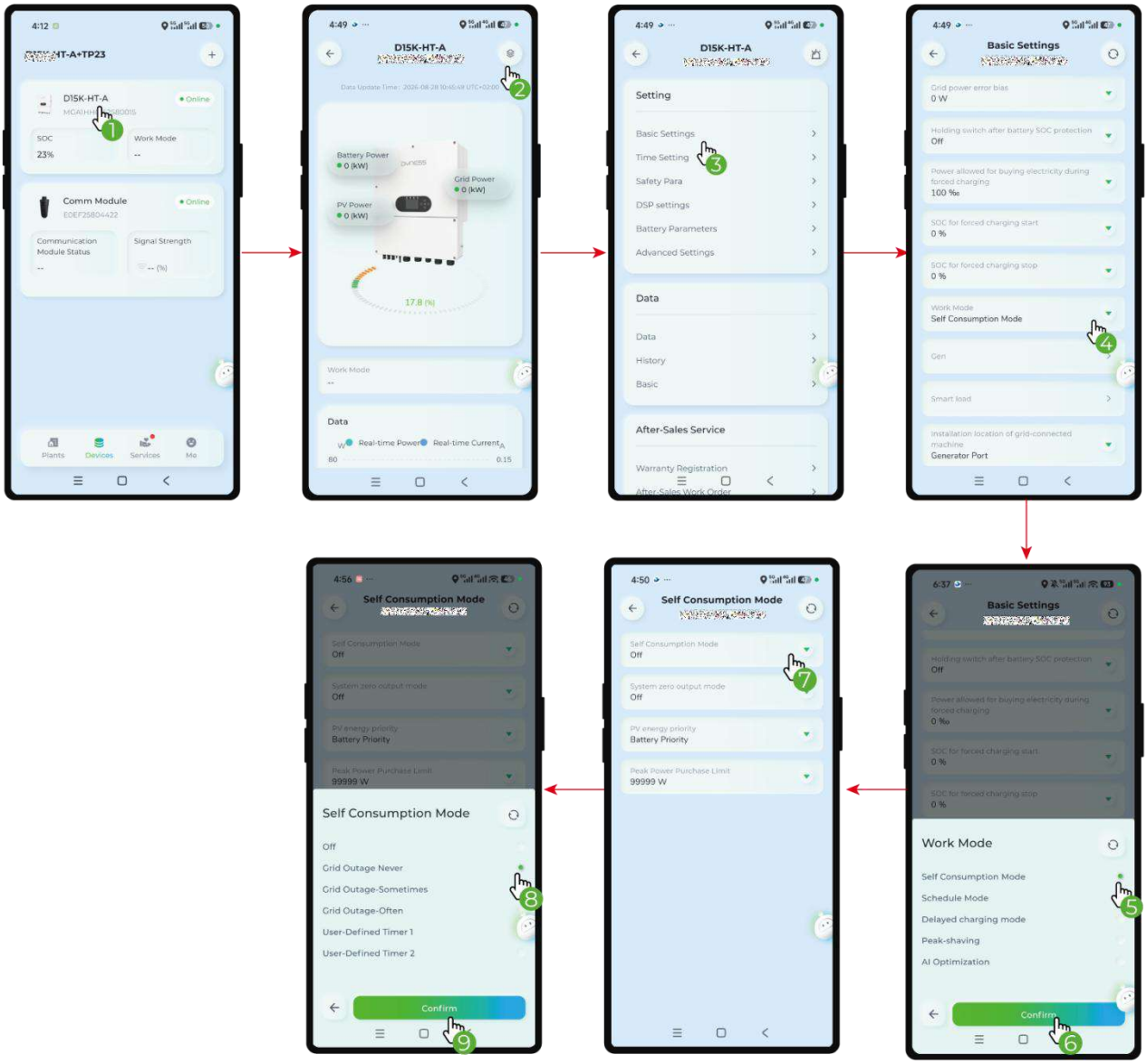

- Parameter Setting

©Dyness reserves the copyright of this document.

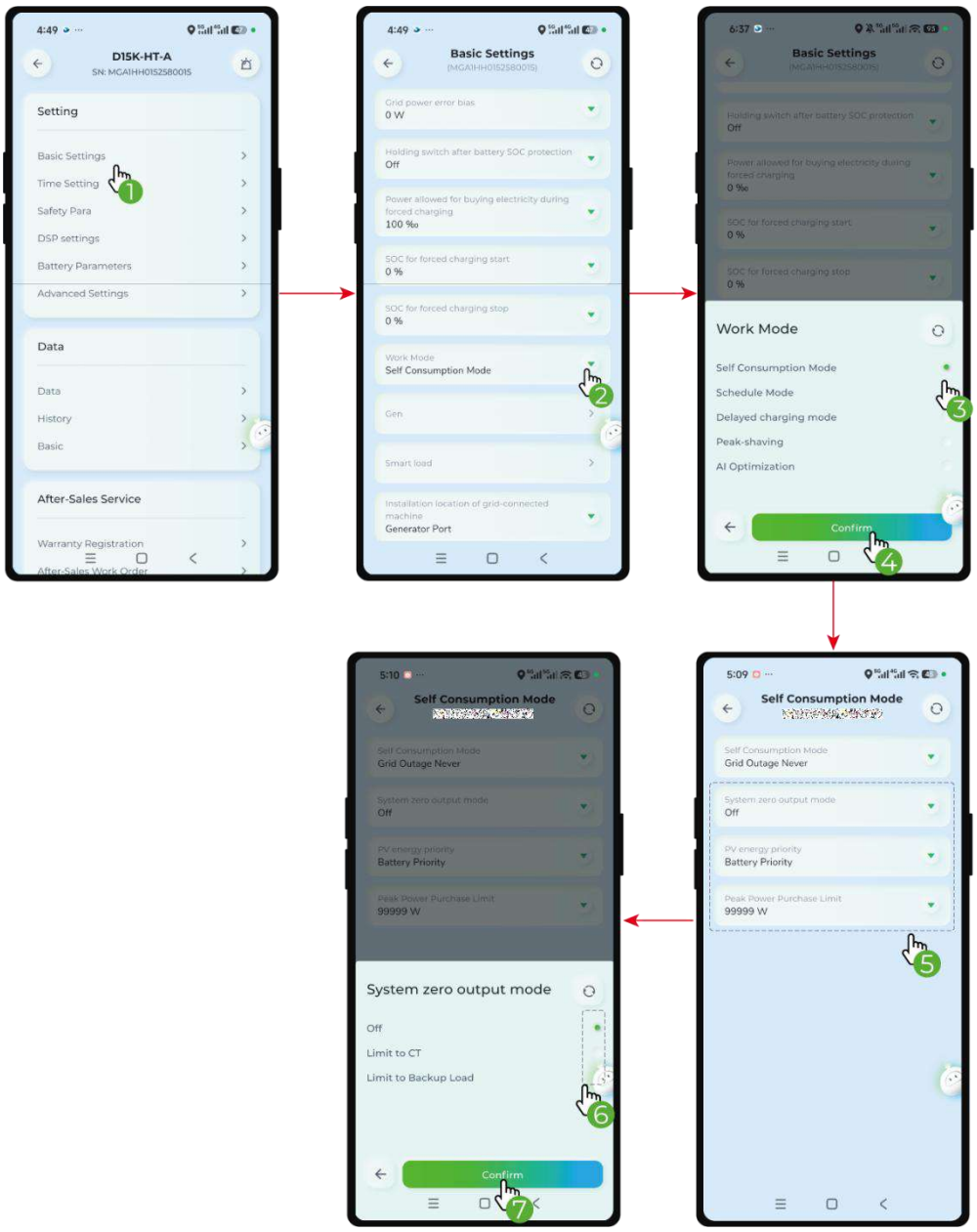

6.3.4.1.2Grid Outage-Sometimes

- Mode Setting

©Dyness reserves the copyright of this document.

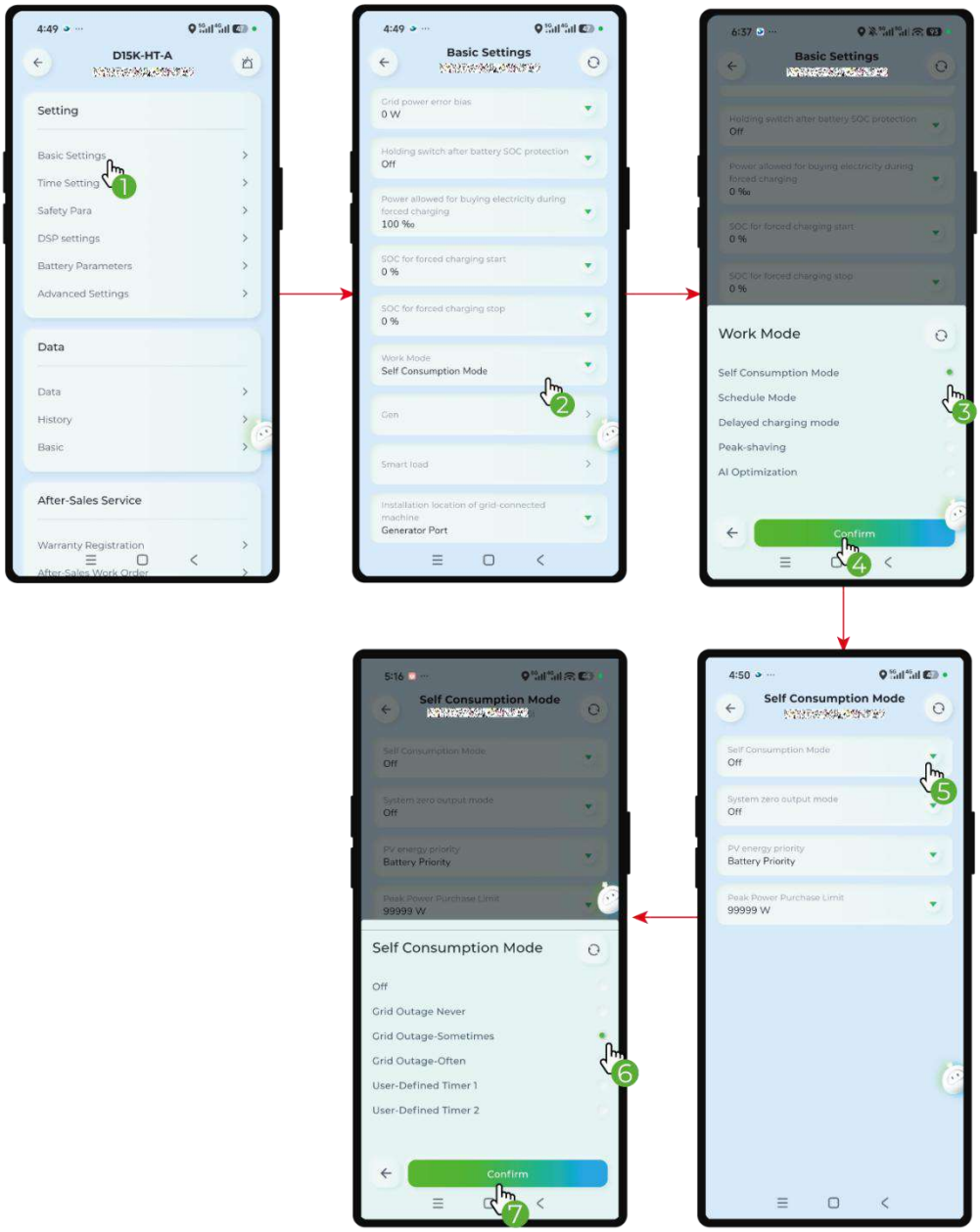

- Parameter Setting

©Dyness reserves the copyright of this document.

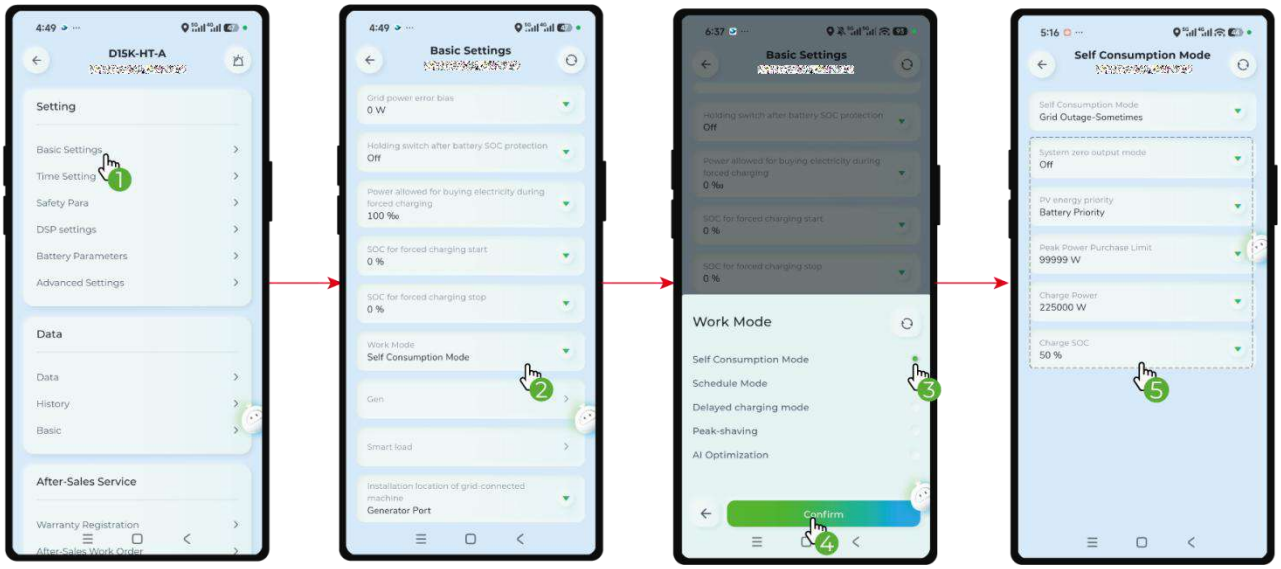

6.3.4.1.3Grid Outage-Often

- Mode Setting

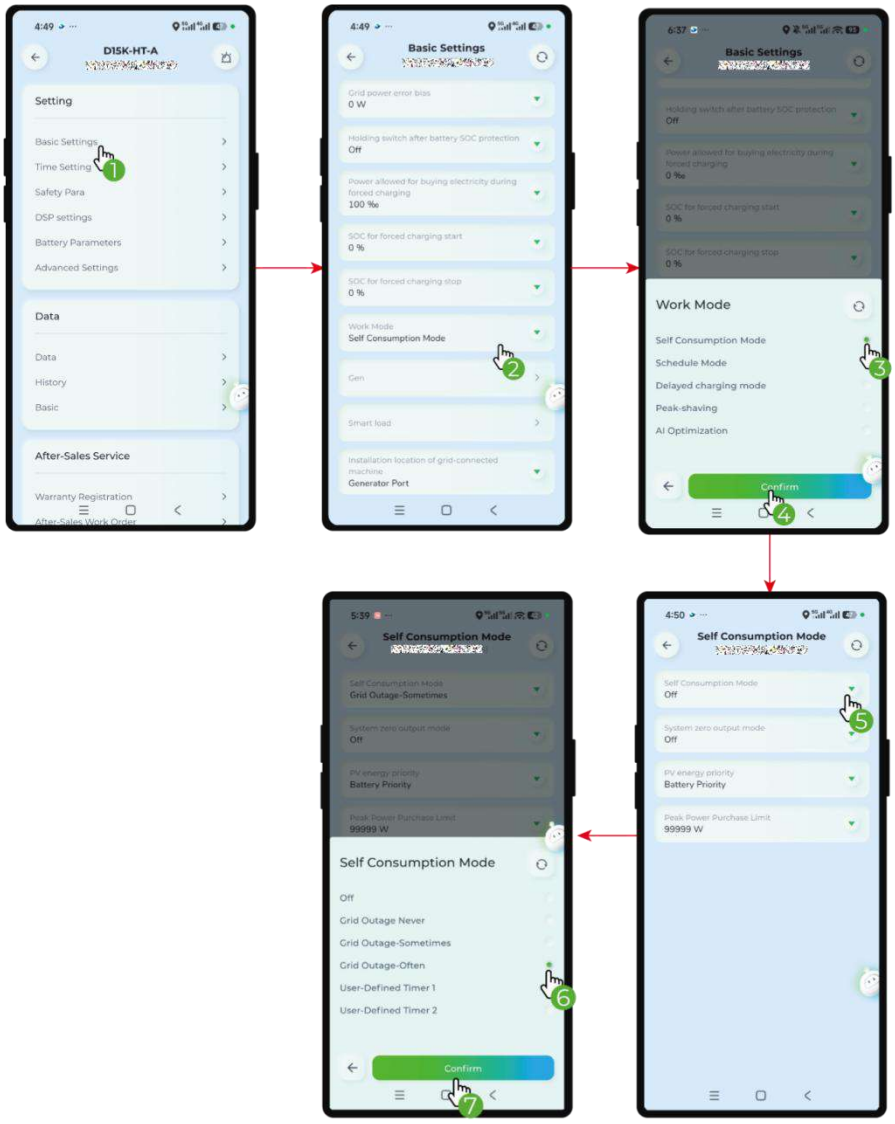

©Dyness reserves the copyright of this document.

- Parameter Setting

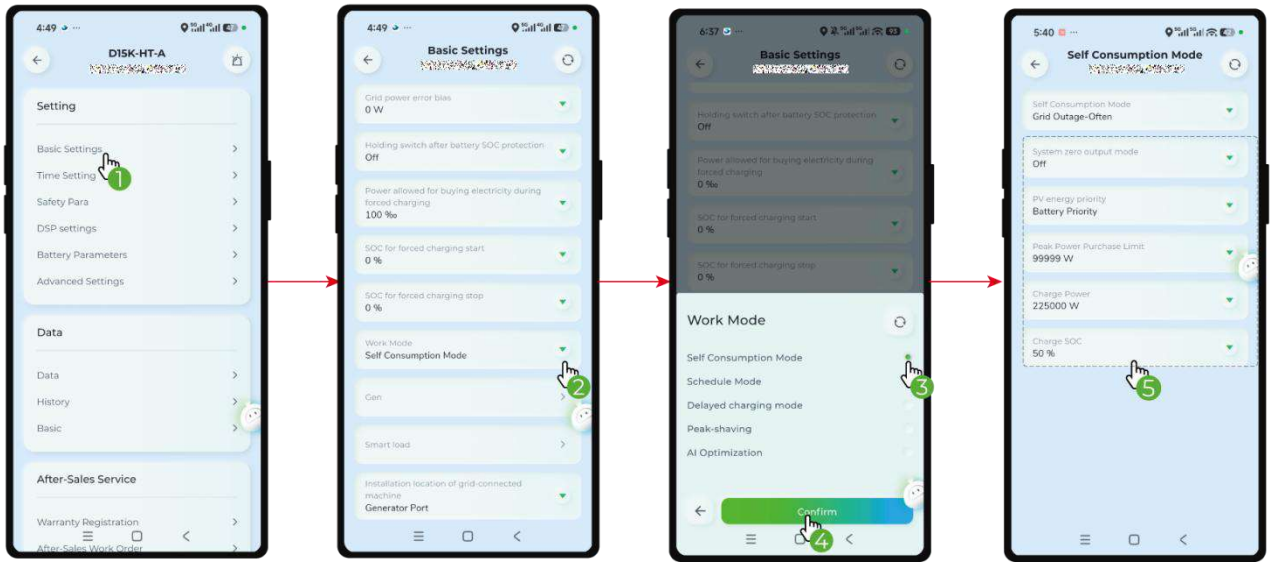

6.3.4.1.4User-Defined Timer 1&2

- Mode Setting

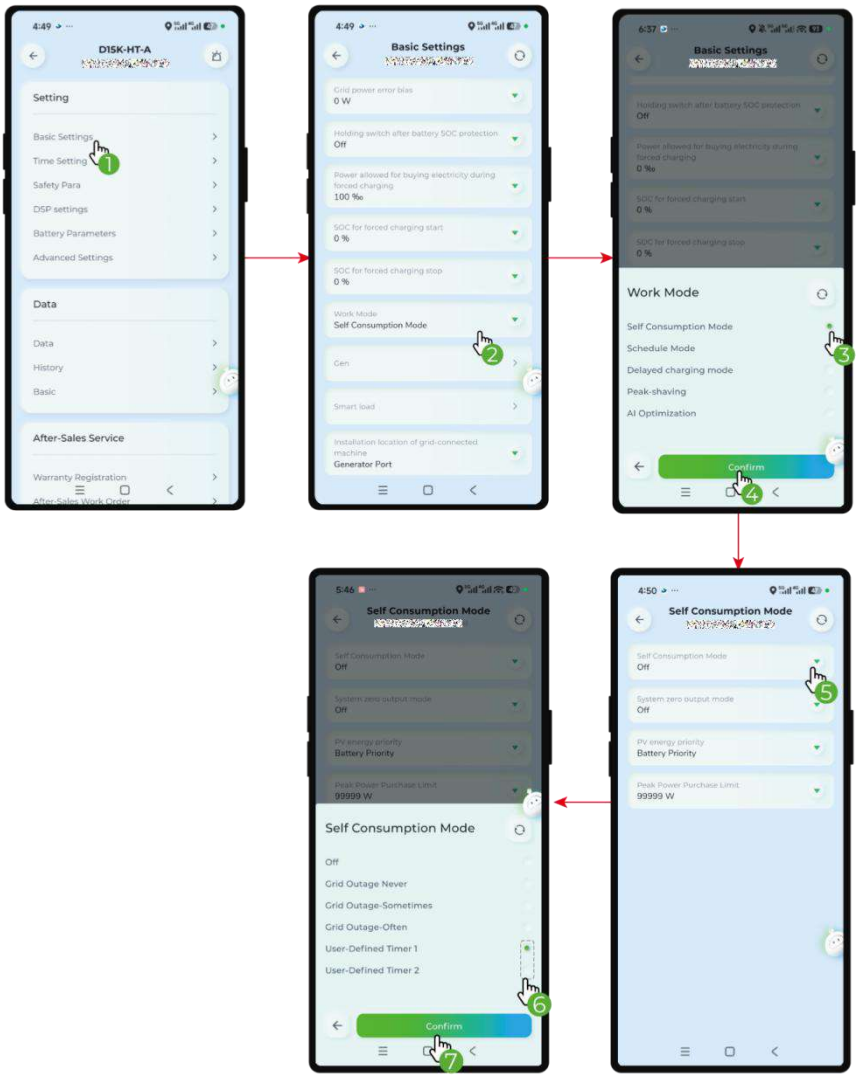

©Dyness reserves the copyright of this document.

- Parameter Setting

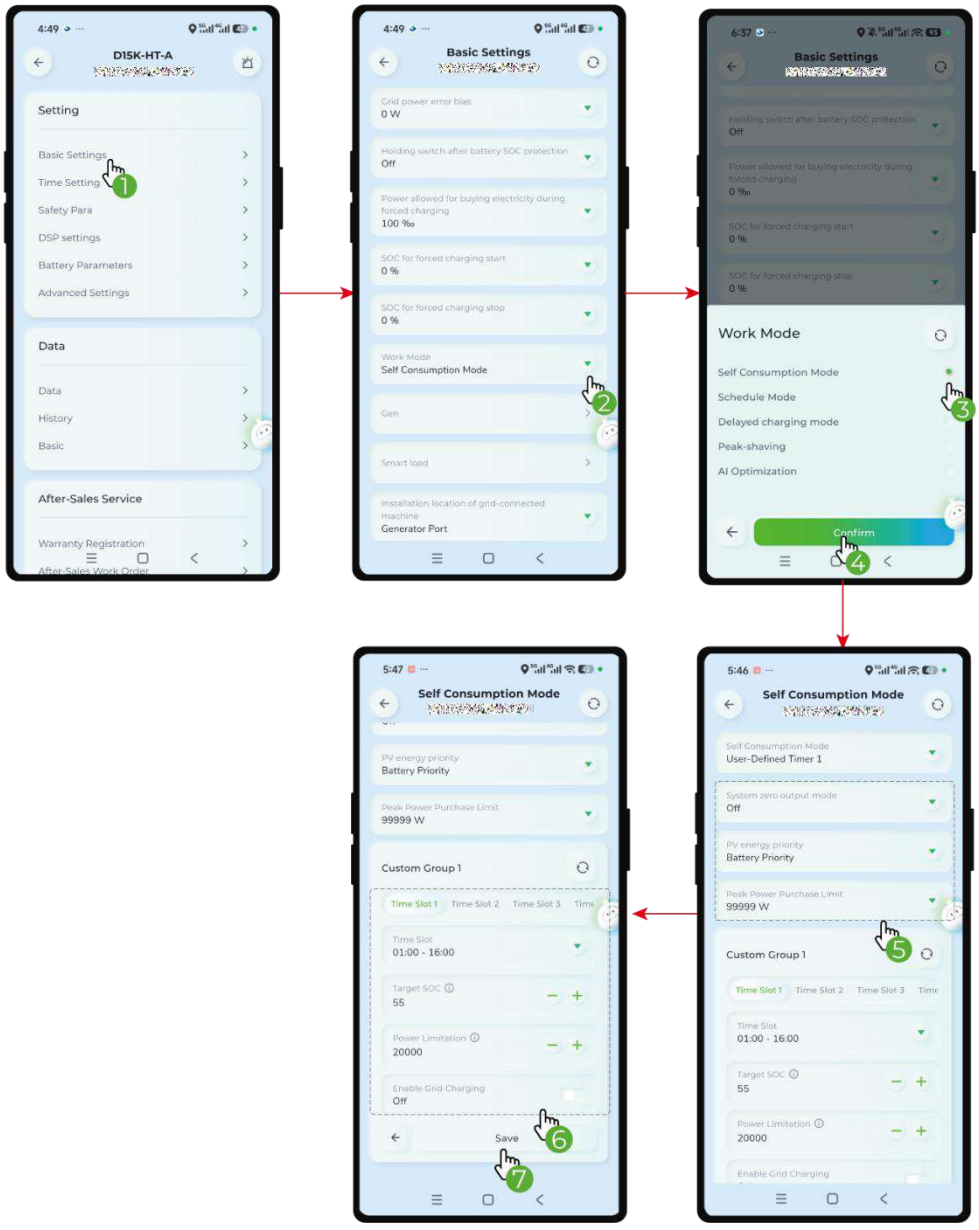

6.3.4.2Schedule mode

- Mode Setting

©Dyness reserves the copyright of this document.

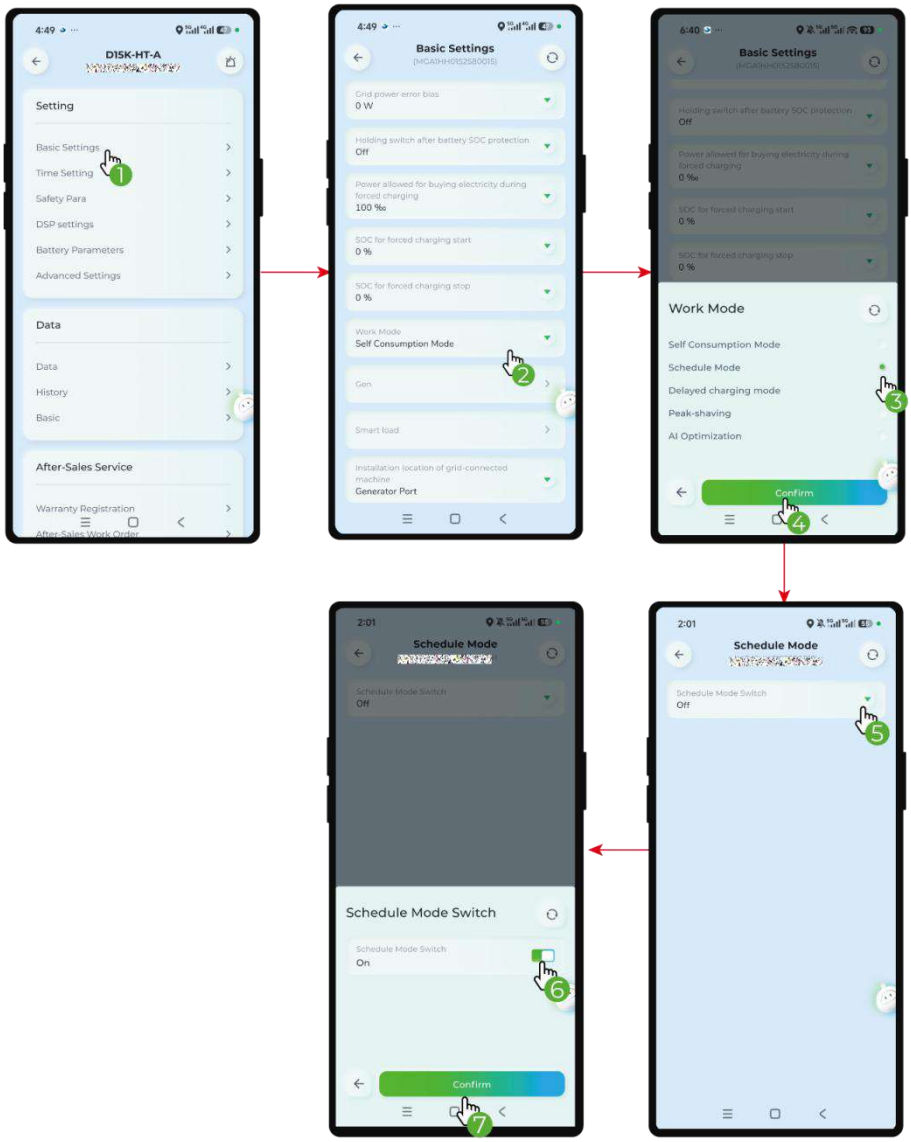

- Parameter Setting

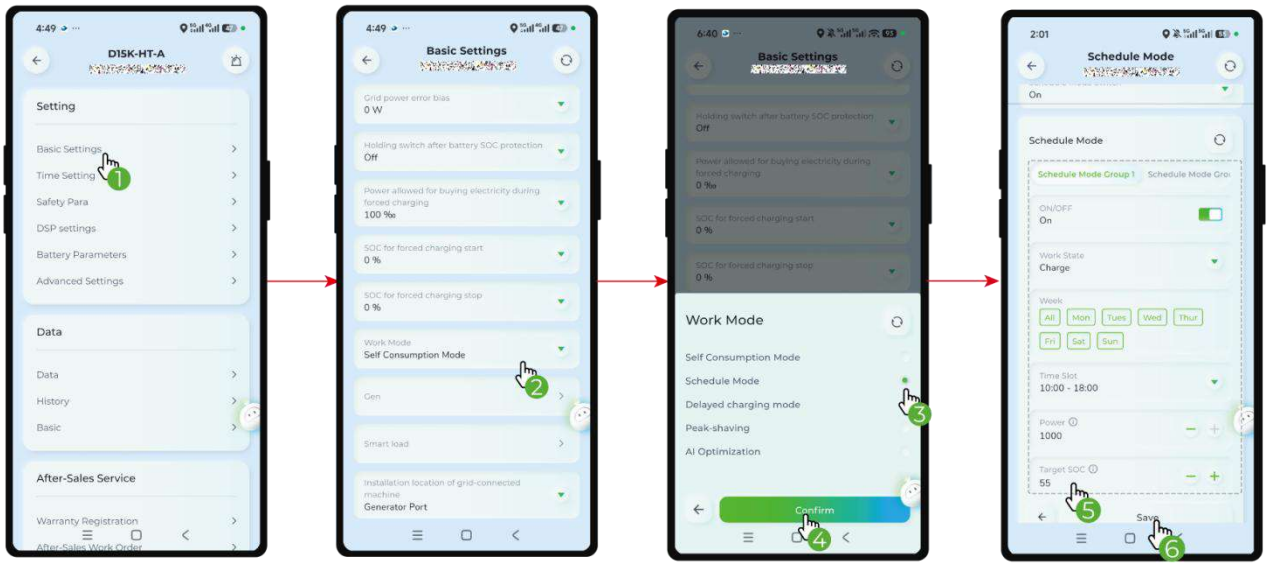

©Dyness reserves the copyright of this document.

6.3.4.3Delay charging mode

- Mode Setting

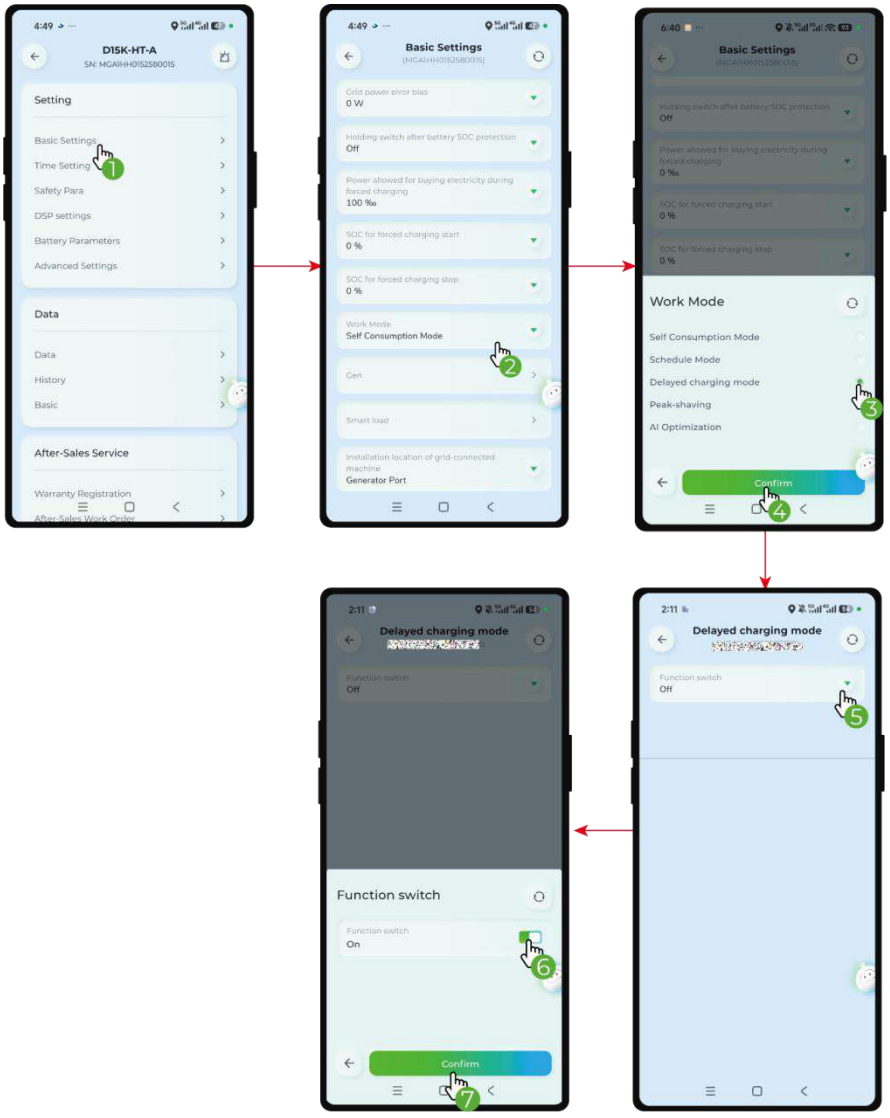

- Parameter Setting

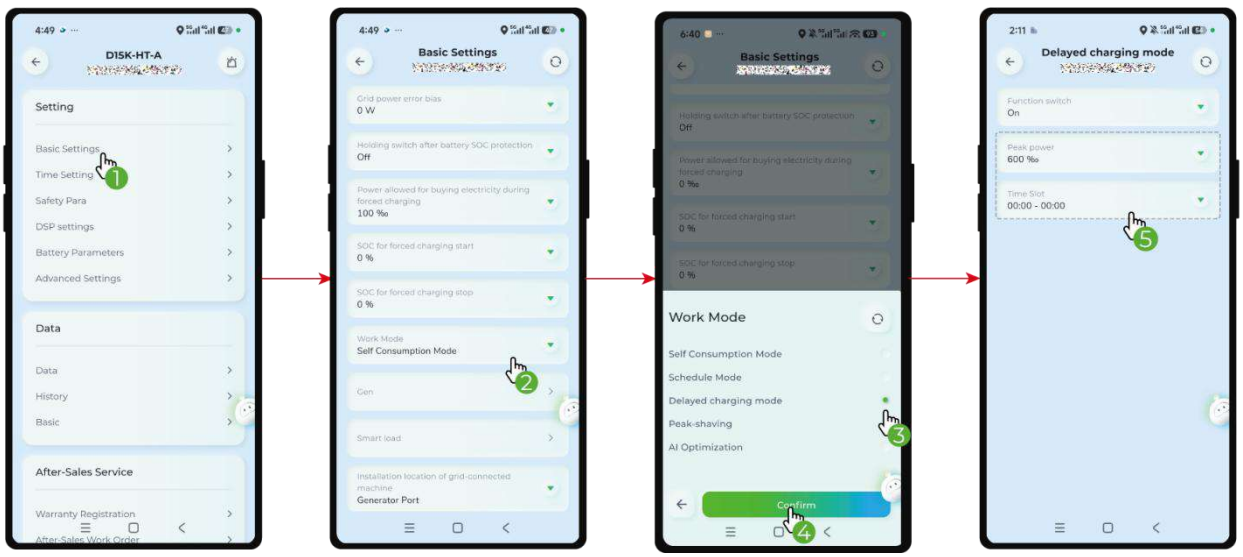

©Dyness reserves the copyright of this document.

6.3.4.4Peak Shaving mode

- Mode Setting

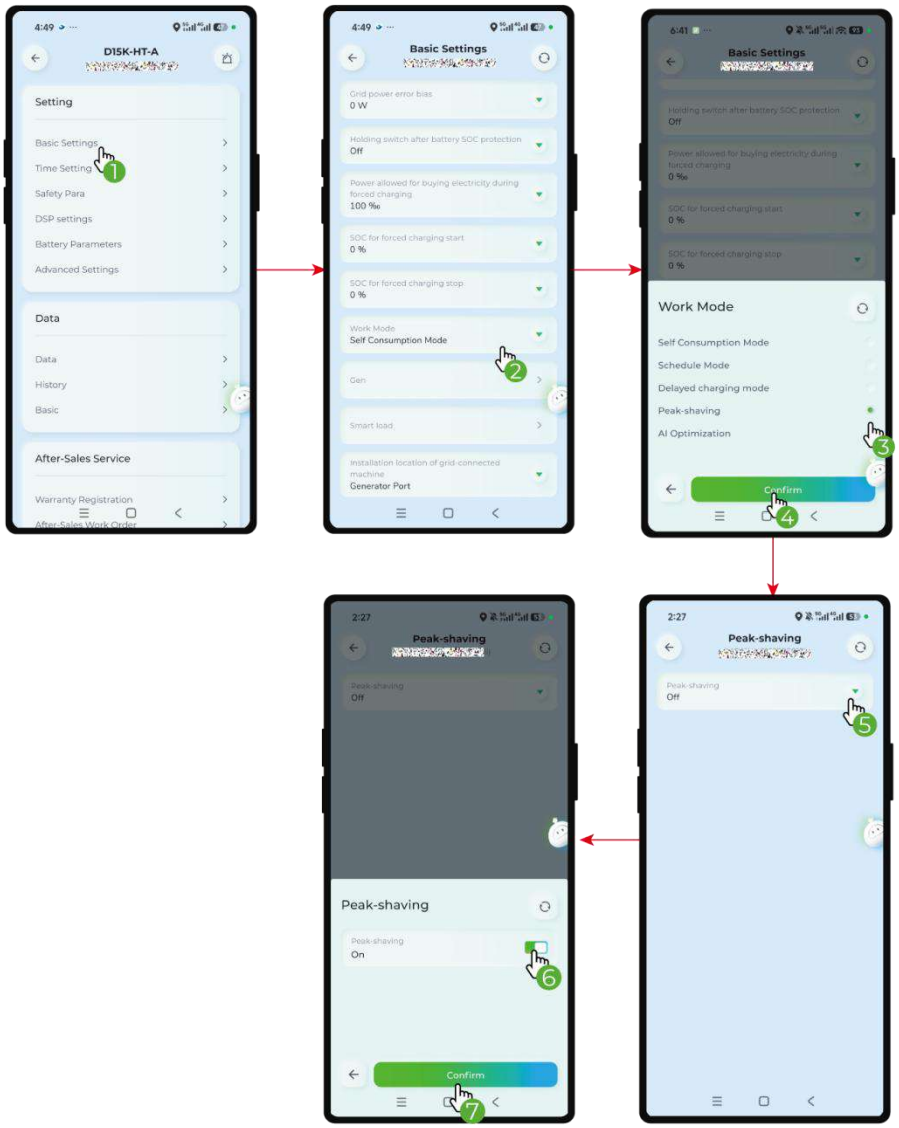

- Parameter Setting

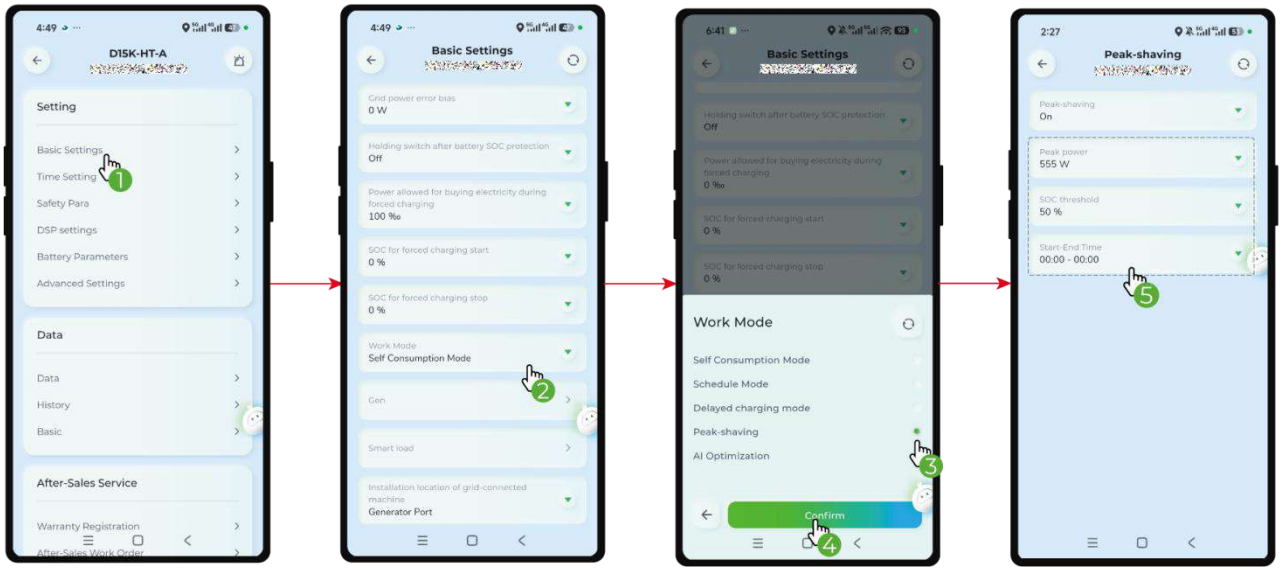

©Dyness reserves the copyright of this document.

6.3.4.5AI Optimization

AI Optimization is a fully automatic intelligent scheduling mode. The system automatically combines real-time floating electricity prices, PV generation forecasts, and household electricity usage habits to dynamically adjust battery charging and discharging. This enables charging during low-price periods and discharging during high-price periods, maximizing electricity cost savings without the need for manual time period settings.

- Mode Setting

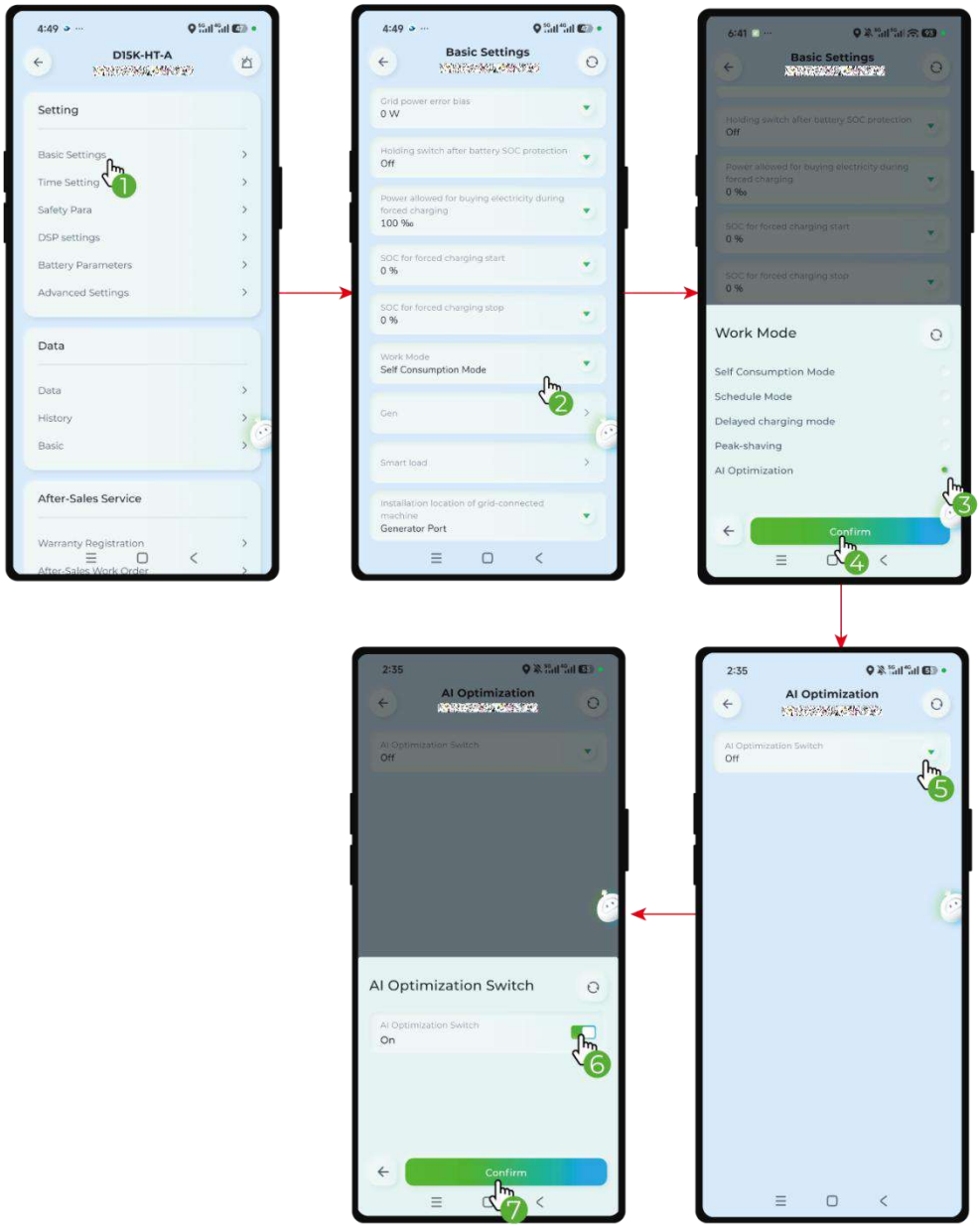

- Parameter Setting

©Dyness reserves the copyright of this document.

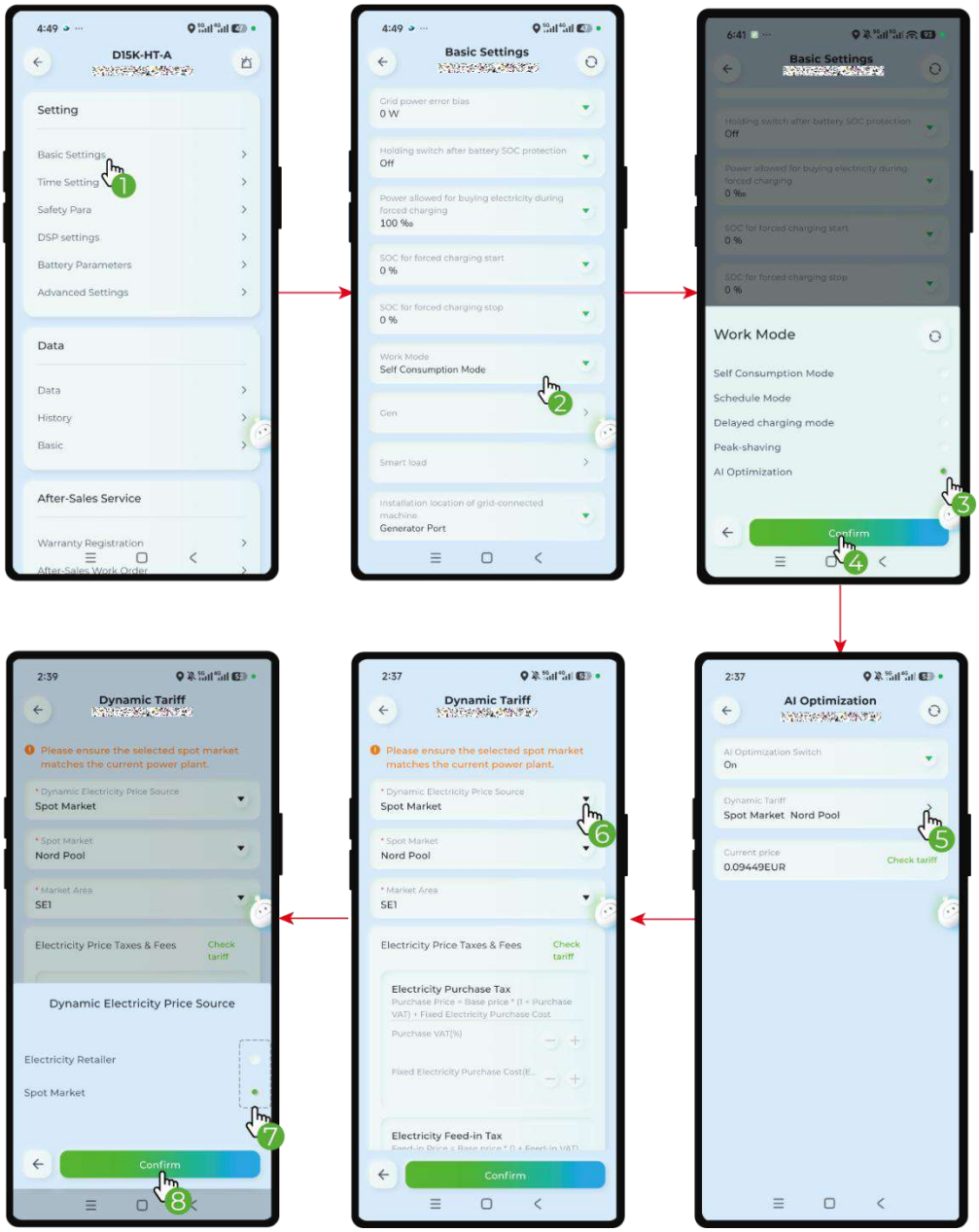

6.3.5Basic safety regulation setting

TIPS
The Safety Regulation must match the country where you live.

©Dyness reserves the copyright of this document.

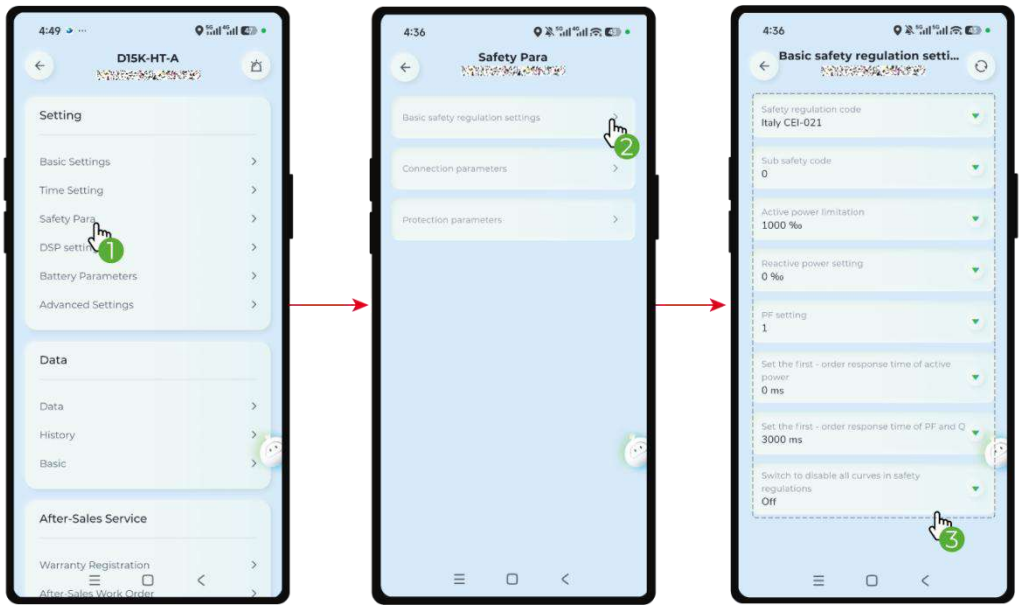

6.3.6View Monitoring Data

6.3.6.1Real-time Monitoring Data

On the device homepage, you can view the real-time power and current curves, as well as the SOC trend.

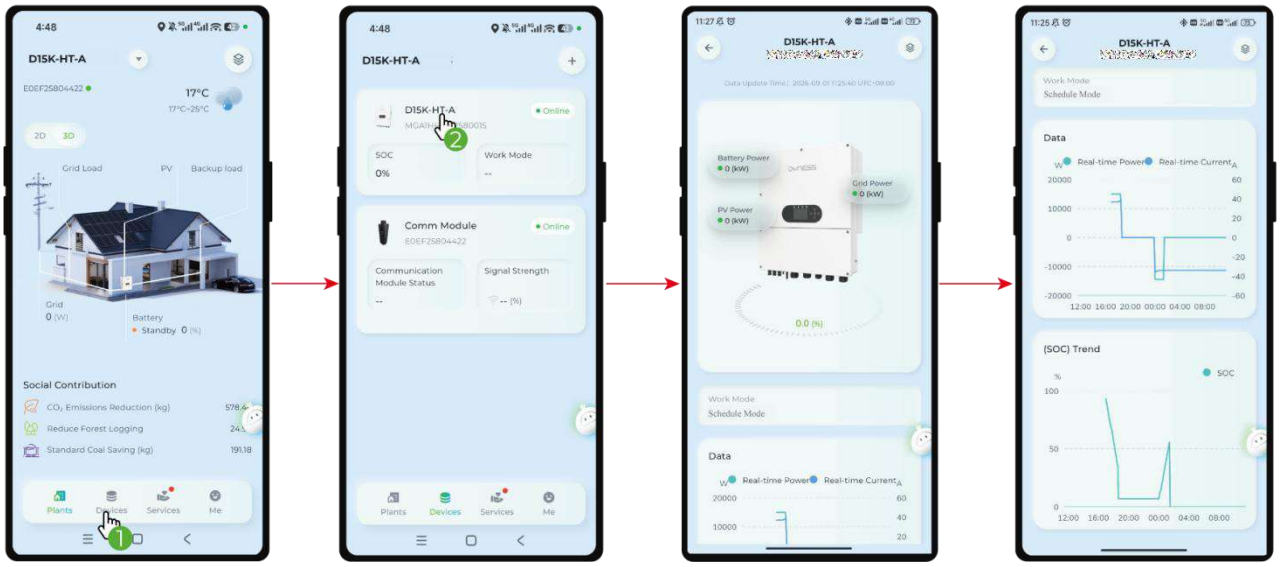

For more detailed real-time parameters, including PV, grid, load, battery, generator, temperature, BUS voltage, energy data, parallel data and version information, please switch to the real-time data page.

©Dyness reserves the copyright of this document.

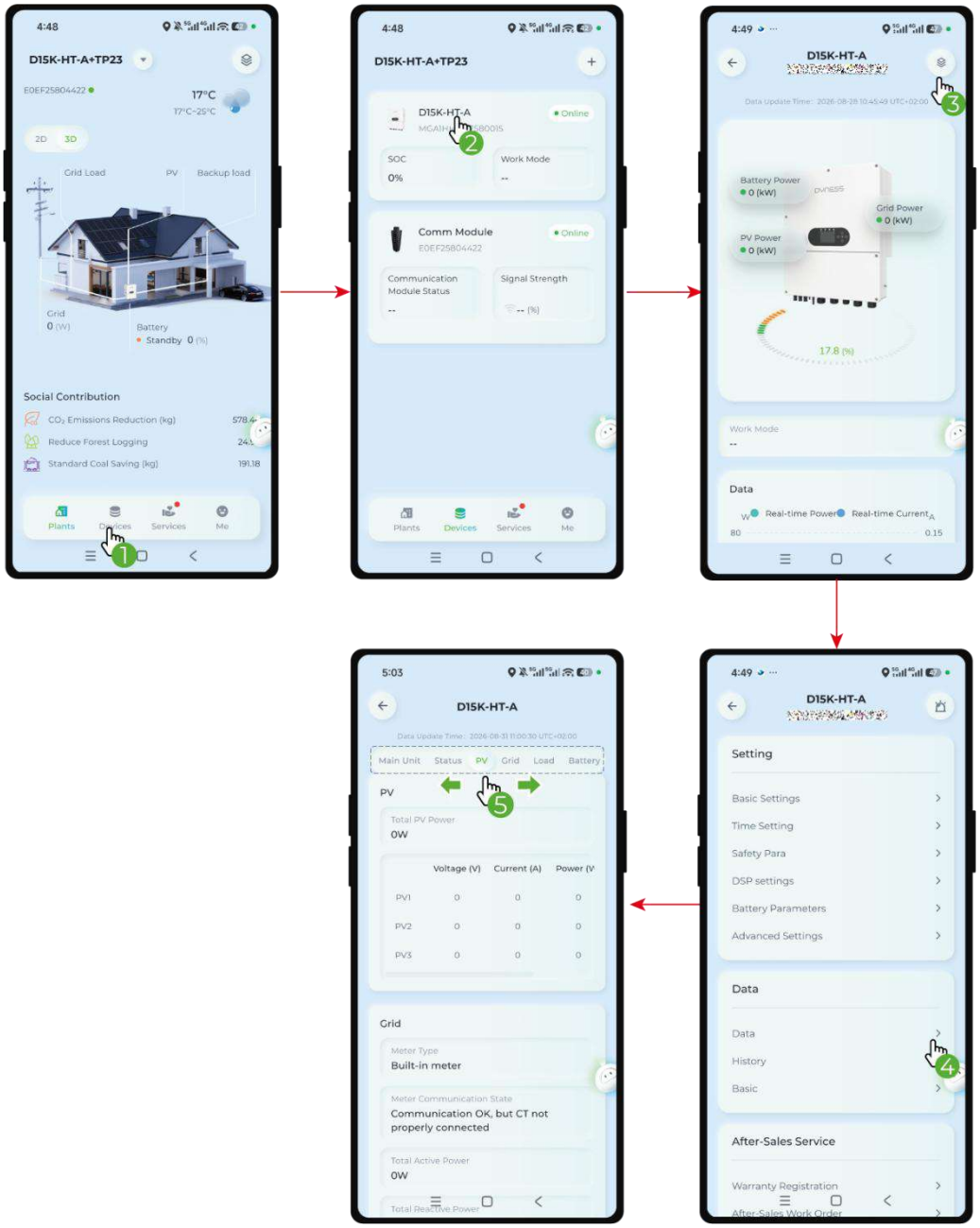

6.3.6.2Historical Monitoring Data

TIPS
Slide the cursor left or right along the chart curve. A pop-up window synchronously shows the values of all selected signal points for the corresponding timestamp.

©Dyness reserves the copyright of this document.

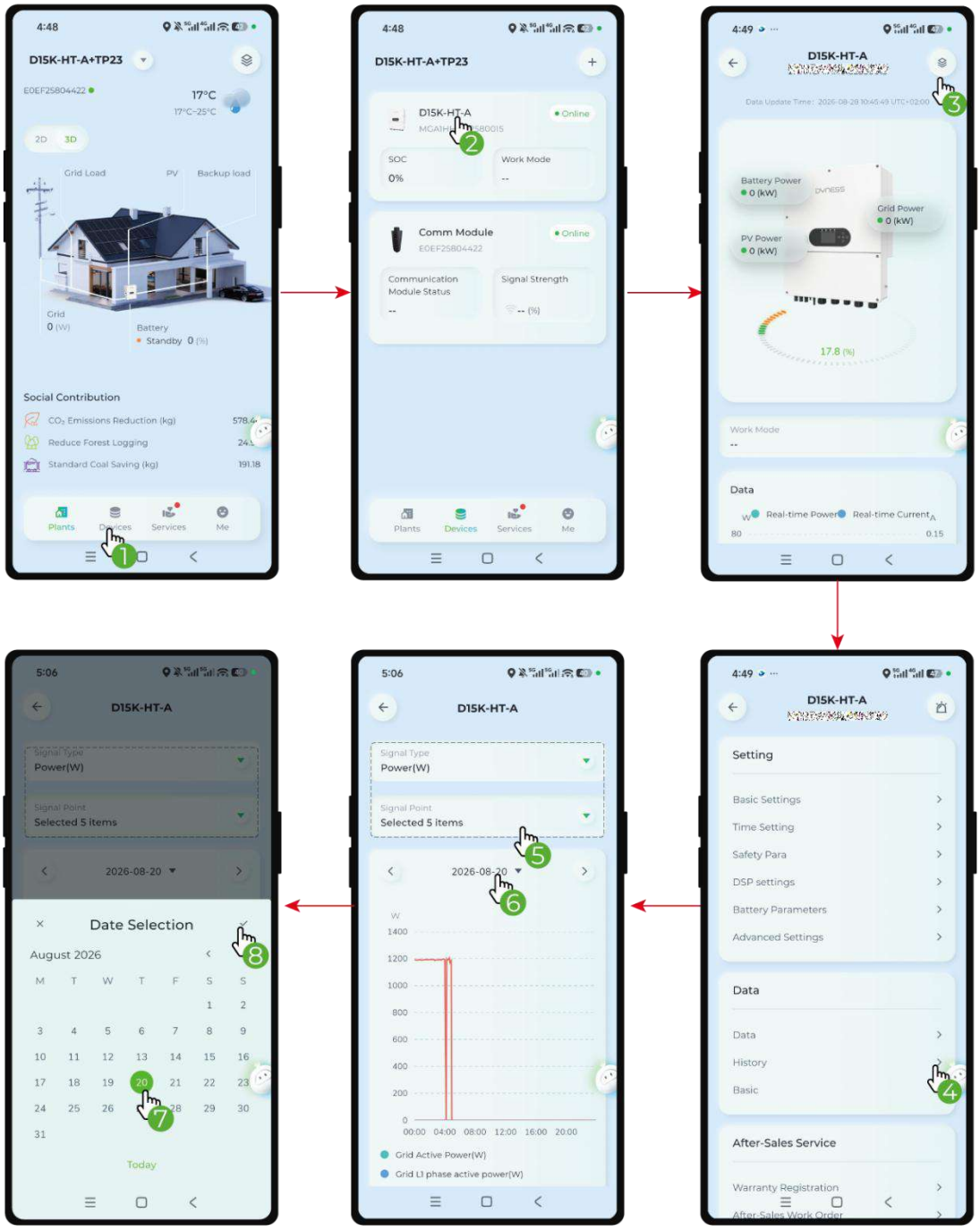

©Dyness reserves the copyright of this document.

6.3.7Phase auto-adaptation function enable/disable

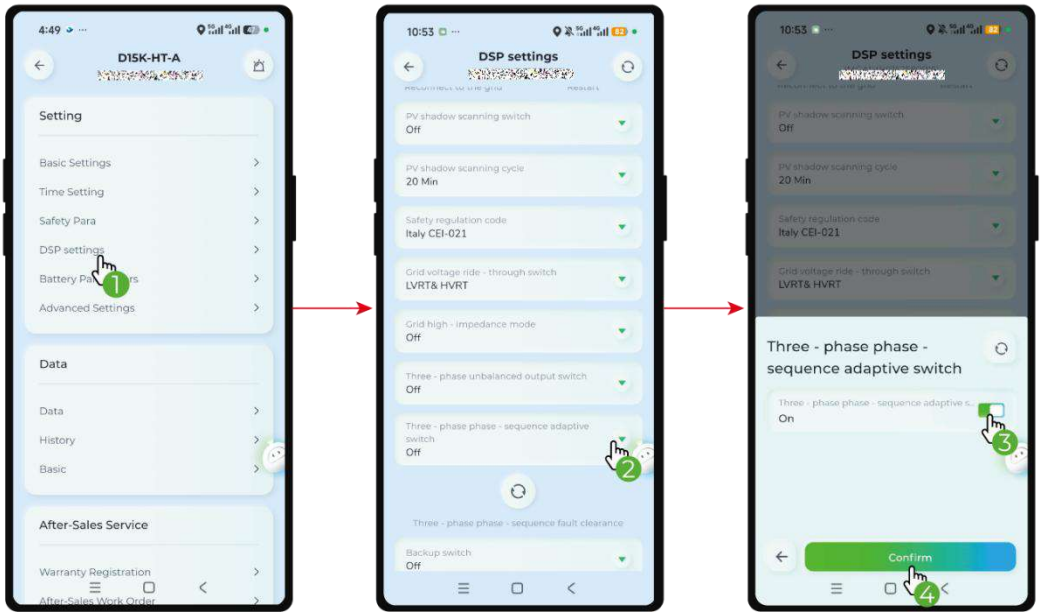

6.3.8High-impedance mode enable/disable

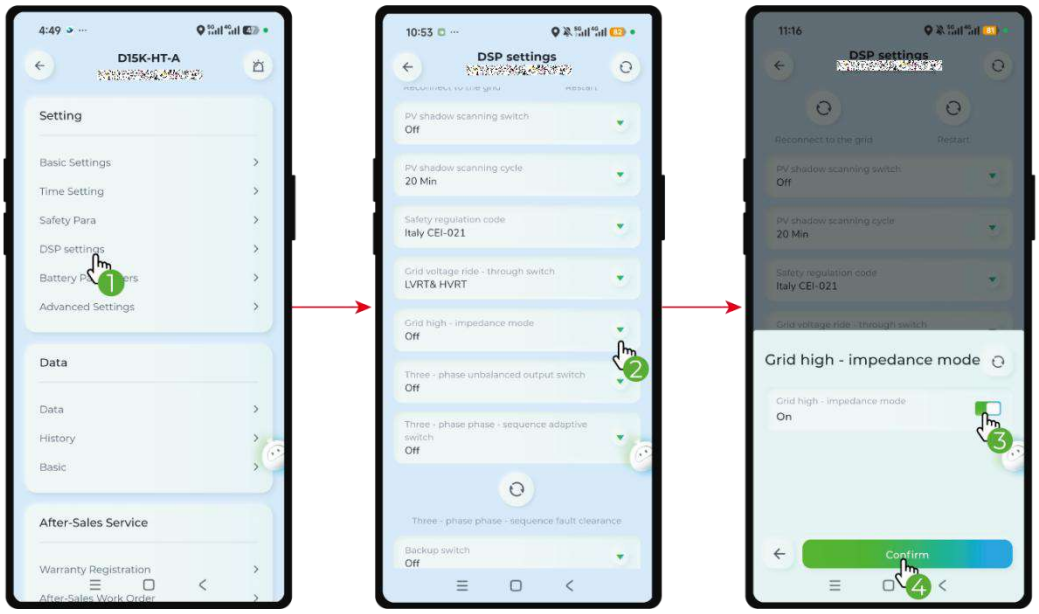

©Dyness reserves the copyright of this document.

6.3.9 Three-phase unbalanced output enable/disable

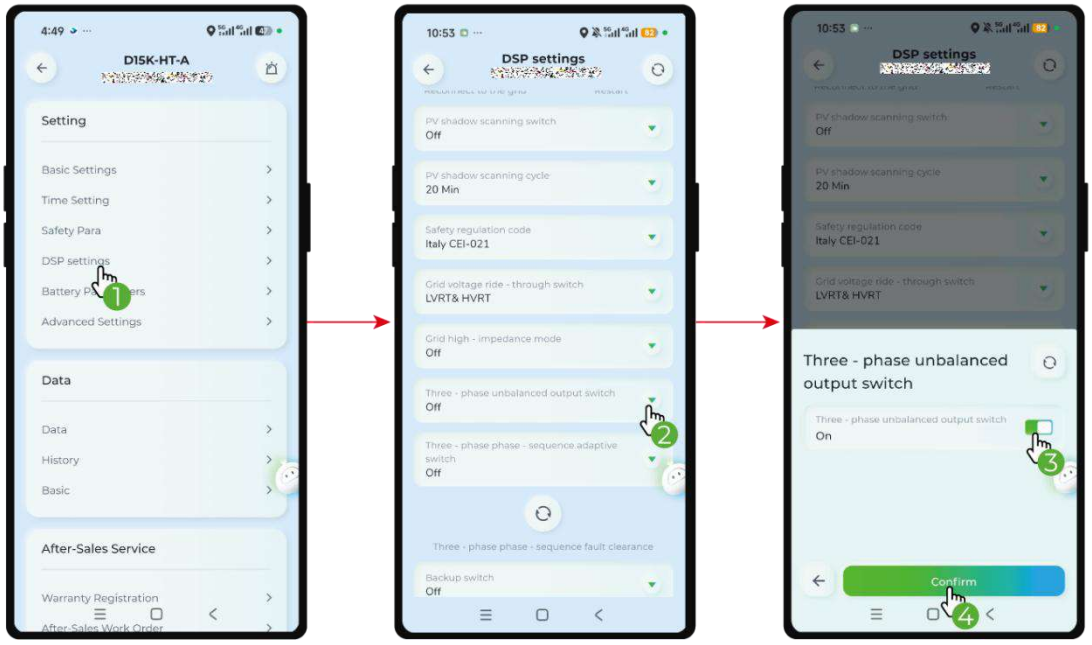

©Dyness reserves the copyright of this document.

7. Equipment Maintenance and Handling

7.1 Maintenance Precautions

- Equipment operation and maintenance can only be operated by the professional personnel, and take good safety precautions.

	1. Make sure the inverter is powered off before operation and maintenance. Otherwise, the inverter may be damaged or electrocution may occur. 2. After power-off, due to the characteristics of the equipment itself, it is necessary to wait for a period of time for the components to be fully discharged before operation.

- See section 6.1 for power down procedure

1. Disconnect the grid AC circuit breaker between the inverter and the utility grid.
2. Disconnect the backup AC circuit breaker between the inverter and the loads.
3. Disconnect the battery DC circuit breaker between the inverter and the batteries.
4. Disconnect the PV switch between the inverter and the PV string.

7.2 Daily Maintenance

- Please refer to the following table for regular maintenance of the equipment

Maintenance area	Maintenance methods	Maintenance cycles
Connection cable	Check for loose electrical connections, broken cables, etc.	1 time/half year
Air inlet and outlet	Check the air inlet and outlet and clean foreign objects and dust.	1 time/half year
External Fan	Check to see if the fan is spinning properly and if the noise is getting significantly louder or quieter. If removal for cleaning or replacement is required, please refer to the following steps.	1 time/half year
Sealability	Check whether the sealing of the inverter inlet hole meets the requirements, if there is too large a gap or not sealed, need to be resealed.	1 time/half year

- External Fan Replacement Procedure

1. Completely power-off the inverter, disconnect the PV, battery, and AC cables, and wait 5 minutes.
2. Take the inverter off the mounting wall and remove the duct backplate with a screwdriver.
3. Unplug the fan connector, remove the external fan pair terminals and clean or replace them.
4. After cleaning or replacing, plug in the fan connector and install the air duct back plate.

©Dyness reserves the copyright of this document.

7.3 Fault Location and Handling

- Please locate and handle faults based on the following methods. If the issue cannot be resolved, contact after-sales service. Before contacting support, collect the following information:

1. Inverter information (e.g., serial number, firmware version, installation date, fault occurrence time, fault details).
2. Installation environment (e.g., weather conditions, shading of PV modules). Provide photos/videos for analysis if possible.
3. Grid status, PV module status, and Battery status.

- Fault Information and Solutions:

No.	Fault Name	LCD Display	Fault Cause and Solutions
1	Grid Loss	Power grid loss	Cause: Grid connection is lost. Solutions: 1.The alarm is automatically cleared after the grid power supply is restored. 2.Check whether the AC cable is connected and the AC breaker is on.
2	Grid voltage fault	Grid voltage fault	Cause: Grid voltage exceeds allowable range (undervoltage/overvoltage/VRT). The inverter automatically returns to normal operation after detecting that the power grid is normal. Solutions: 1.If the problem occurs frequently, check whether the grid voltage is within the permissible range. 2.Check grid voltage compliance. If unstable, configure Backup as EPS mode. 3.Enable high-impedance mode if voltage fluctuates severely at remote installations.
3	Grid frequency fault	Grid frequency fault	Cause: Grid frequency exceeds allowable range (under/overfrequency). The inverter automatically returns to normal operation after detecting that the power grid is normal. Solutions: Verify grid frequency compliance. Contact the utility company to adjust protection thresholds if necessary.
4	Grid phase angle fault	Grid phase angle fault	Cause: Grid voltage phase angle deviation. Rare occurrence. The inverter automatically returns to normal operation after detecting that the power grid is normal. Solutions: Contact service provider if persistent.
5	Grid phase sequence fault	Grid phase sequence fault	Cause: Incorrect phase sequence (non-positive sequence). Solutions: 1.Enable the phase sequence auto-adaptation function (Default: Enabled). This function can only be enabled or disabled via the APP. Refer to Section 6.3.7 for detailed operations. 2. Verify grid terminal wiring sequence.
6	AC current has a high DC	On-grid high DC component	Cause: The problem is caused by an external fault like a utility grid exception or frequency exception, the

©Dyness reserves the copyright of this document.

No.	Fault Name	LCD Display	Fault Cause and Solutions
	component		inverter will recover automatically after solving the problem. Solutions: 1.If the problem occurs frequently contact the dealer or the after-sales service. 2.If it persists and cannot be recovered, it may be a sensor malfunction, please contact the service provider for confirmation.
7	Off-grid AC voltage has a high DC component	Off-grid high dc component	Cause: Generally caused by half-wave load, it can automatically restore normal operation. Solutions: 1. Check load types (avoid half-wave load). 2. If it persists and cannot be recovered, it may be a sensor malfunction, please contact the service provider for confirmation
8	N-PE relay fault	N-PE relay fault	Cause: Generally caused by poor grounding, stop after two consecutive tests, you need to manually clear. Solutions: 1. Ensure proper grounding. 2. Disable N-PE relay via Inverter config if externally shorted. 3. If the fault persists, the relay may be faulty. Contact the service provider for confirmation.
9	Backup output fault (overload, overcurrent, undervoltage)	Backup output fault	Cause: Overloaded Backup port or insufficient battery discharge capability. Solutions: 1. Optimize Backup load configuration. 2. Verify battery and load compatibility.
10	The inverter temperature is too high	Device over temperature	Cause: High operating temperature Solutions: 1. Ensure adequate airflow and avoid direct sunlight. 2. If it persists and cannot be recovered, it may be a sensor malfunction, please contact the service provider for confirmation
11	The battery or PV input voltage is too high	DC input over voltage	Cause: PV string or battery voltage exceeds specifications. Solutions: 1. Please check the number of PV strings to ensure that the maximum open circuit voltage does not exceed the inverter operating voltage range. 2. Check the battery specifications to ensure that the maximum battery voltage does not exceed the inverter operating voltage range.
12	BUS voltage is too high	Bus over voltage	Cause: The DC bus voltage of the inverter is out of the working range, usually because the input voltage of PV strings is too high or the external environment changes dramatically leading to the control failure, the inverter will automatically recover when it detects that the bus voltage is restored to the working range. Solutions: 1. If it happens frequently, please check the number of PV strings to make sure the maximum open circuit voltage does not exceed the inverter working voltage

©Dyness reserves the copyright of this document.

No.	Fault Name	LCD Display	Fault Cause and Solutions
			range. 2. If it is always there and cannot be recovered, please contact the service provider for confirmation.
13	Internal memory operation failure	Flash operation failure	Cause: Flash memory failure. Solutions: Replace flash memory if reboot fails, please contact the service provider for confirmation.
14	CPLD communication loss	CPLD communication loss	Cause: Internal logic chip failure. Solutions: Replace CPLD if reboot fails, please contact the service provider for confirmation.
15	Slave DSP communication loss	Slave DSP communication loss	Cause: Firmware upgrade failure or chip damage. Solutions: 1. Retry firmware upgrade. 2. Replace DSP chip if unresolved, please contact the service provider for confirmation.
16	ARM communication loss	ARM communication loss	Cause: Communication failure between ARM and DSP. Solutions: 1. Retry firmware upgrade. 2. Contact service provider.
17	Abnormal battery access	Battery connect abnormal	Cause: Battery ready function not purchased or hardware mismatch. Solutions: 1. Remove battery if function is disabled. 2. Contact service provider for standard models.
18	The insulation resistance is low	Insulation fault	Cause: System insulation below safety threshold. Solutions: 1. Check PV/battery insulation for damage. For example, the wiring harness is damaged or the component shell is damaged. 2. Isolate components to diagnose. 3. Contact service provider.
19	GFCI protection	GFCI protection	Cause: System leakage current exceeds limit. After the fault disappears, the inverter automatically returns to normal operation. Solutions: 1. Inspect system components and grounding. 2.If the fault persists, the sensor may be faulty. Contact the service provider for confirmation.
20	Reference voltage fault	Reference voltage fault	Cause: Control board reference voltage failure. Solutions: Replace hardware if reboot fails, please contact the service provider for confirmation.
21	AC relay fault	AC relay fault	Cause: Inverter AC terminal relay self-test fails, two consecutive self-test failures stop operation, need to manually recover. Solutions: 1. If it happens frequently, please check whether there is poor contact or empty connection in the inverter grid port wiring. 2. If the fault described in 1 is rectified and the relay

©Dyness reserves the copyright of this document.

No.	Fault Name	LCD Display	Fault Cause and Solutions
			cannot be recovered after restart, contact the service provider for confirmation.
22	Relay self-test fault	Relay once self-test fault	Cause: The inverter AC terminal relay fails the single self-test, the inverter will automatically re-test and resume operation after it passes. Solutions: If it happens frequently, please check whether the wiring of inverter grid port has poor contact or empty connection.
23	Current sensor fault	HCT fault	Cause: Inverter current sensor failure, unit stops operation. Recovery can be achieved by either full power cycle restart of the unit or sending a restart command via the upper monitoring platform. Solutions: If it can not be restored after reboot, it may be the inverter sensor failure, please contact the service provider for confirmation.
24	Current sensor self-test fault	HCT self-test fault	Cause: Inverter current sensor self-test failure, the inverter will automatically re-test and resume operation after it passes. Solutions: If it happens frequently, please contact the service provider for confirmation.
25	The GFCI device fault	GFCI self-test fault	Cause: Inverter GFCI device failure, unit stops operation. Recovery can be achieved by either full power cycle restart of the unit or sending a restart command via the upper monitoring platform. Solutions: If it can not be restored after reboot, it may be the inverter sensor failure, please contact the service provider for confirmation.
26	GFCI self-test fault	GFCI once self-test fault	Cause: Inverter GFCI self-test failure, the inverter will automatically re-test and resume operation after it passes. Solutions: If it happens frequently, please contact the service provider for confirmation.
27	PV reverse connection	PV Connect reverse fault	Cause: PV string polarity reversed. Solutions: Correct PV polarity. See Section 5.3 for detailed operating steps.
28	Battery reverse connection	Bat Connect reverse fault	Cause: Battery polarity reversed. Solutions: Correct battery polarity. See Section 5.4 for detailed operating steps.

- Warning Information and Solutions (Auto-recoverable):

©Dyness reserves the copyright of this document.

No.	Warning Name	LCD Display	Warning Cause and Solutions
1	PV/Battery voltage low	PV/Battery voltage low	Cause: Insufficient PV/battery voltage for grid-tie. Solutions: Automatic recovery once voltage normalizes.
2	BUS voltage low	Bus voltage low	Cause: Insufficient PV/battery power during startup or backup operation. Solutions: 1.Insufficient PV energy in the morning leads to grid-connected startup failure, which can be recovered automatically without treatment. 2.Optimize Backup load during off-grid operation.
3	CPLD warning. Please check register 10605	CPLD warning	Cause: Internal logic chip anomaly (check register 10605).The operation can be automatically resumed after the problem disappears. Solutions: Contact service provider if persistent.
4	The phase-locked loop fault	PLL warning	Cause: Grid waveform phase anomaly. Solutions: Contact service provider if persistent.
5	Inverter control fault	Inverter control fault	Cause: Inverter control system failure. Solutions: 1. Automatic recovery after brief shutdown. 2. Contact service provider if unresolved.
6	Inverter software overcurrent	Inverter software overcurrent	Cause: AC current exceeds limits due to grid/load transients. Solutions: 1. Verify load types (e.g., motors, water pumps, air conditioners). 2. Contact service provider if unresolved.
7	Inverter hardware overcurrent	Inverter hardware overcurrent	Cause: AC overcurrent protection triggered. Solutions: Same as above.
8	Inverter PWM fault	Inverter PWM fault	Cause: PWM generator failure. Solutions: 1. Automatic recovery after brief shutdown. 2. Contact service provider if unresolved.
9	Battery software overcurrent	Battery software overcurrent	Cause: Battery current exceeds limits. Solutions: 1. Optimize load usage. 2. Contact service provider if unresolved.
10	PV software overcurrent	PV software overcurrent	Cause: PV current exceeds limits. Solutions: 1. Check PV cable connections and length (≤300m). 2. Contact service provider.
11	Off-grid to On-grid phase sequence fault	Off-grid phase sequence error	Cause: Phase sequence mismatch during grid restoration. Solutions: 1. Disable phase sequence auto-adaptation if three-phase motors are connected. 2. No need to deal with it in general application. Note: The phase sequence auto-adaptation function cannot be disabled via the LCD touchscreen. If you need to disable this function, complete the

©Dyness reserves the copyright of this document.

No.	Warning Name	LCD Display	Warning Cause and Solutions
			configuration via the Dyness APP. For detailed operating procedures, refer to 6.3.4.7.
12	System software shutdown	System software shutdown	Cause: System active shutdown and reboot, prompted warning, no need to deal with it.
13	Off-grid AC output overvoltage	off-grid output over voltage	Cause: When running off-grid, the Backup port output voltage is too high to protect, protection mechanism, after a short shutdown, the inverter will automatically resume operation. Solutions: If it occurs frequently, please contact the service provider for confirmation.
14	Off-grid AC output undervoltage	Off-grid output under voltage	Cause: Off-grid operation, Backup port output voltage is too low for protection, the protection mechanism, generally caused by excessive loads Solutions: 1. If the photovoltaic presence at this time during the day, the system is transferred to the battery charging, to be battery SOC increased by 20% or more than 90% to restore the Backup port AC voltage output. 2. If only the battery exists, it will be transferred to standby, after a delay to restore the Backup port AC voltage output, the delay time increases with the number of occurrences of the event, the minimum 30 seconds, the maximum 2 hours.
15	Battery PWM fault	Battery PWM fault	Cause: Battery PWM generator failure. Solutions: Contact service provider if unresolved.
16	Bus soft-start fault	Bus soft-start fault	Cause: Bus soft-start failure. Solutions: Contact service provider if reboot fails.
17	Bus Voltage Imbalance	Bus voltage Unbalance	Cause: The positive and negative bus voltage imbalance is out of the operating range, and the inverter resumes normal operation when the voltage returns to the normal range. Solutions: 1. This warning may appear when using half-wave loads when off-grid. 2. If the warning persists and cannot be restored, please contact the service provider for confirmation.

7.4 Equipment handling

- Disassembly of the inverter

1. Ensure that the inverter system is completely powered off
2. Disconnect all cables, including DC cables, AC cables, communication cables, communication modules and PE cables.
3. Remove the inverter from the mounting wall and detach the mounting back plate.
4. Properly store the inverter in its packing box and ensure that the storage conditions meet the requirements for future use.

©Dyness reserves the copyright of this document.

- End-of-life inverter

The inverter system equipment cannot be disposed of with household waste. If the inverter can no longer be used, dispose of it in accordance with local regulations.

©Dyness reserves the copyright of this document.

8. Technical Parameters

Model Name	D5K-HT-A	D6K-HT-A	D8K-HT-A
Battery Input Data			
Battery Type	Lithium battery	Lithium battery	Lithium battery
Battery Voltage Range（V）	120~750	120~750	120~750
Nominal Battery Voltage (V)	600	600	600
Max.Charge/Discharge Current(A)	40/40	40/40	40/40
Max.Charge/Discharge Power(W)	7500/5500	9000/6600	12000/8800
PV String Input Data			
Max.PV Input Power（W）	10000	12000	16000
Max.PV Input Voltage（V）	1000	1000	1000
Working Voltage Range(V)	80~950	80~950	80~950
First Feed-in Voltage（V）	100	100	100
MPPT Range For Nominal Power（V）	250~850	250~850	250~850
Nominal PV Input Voltage（V）	750	750	750
Max.Input Current(A)	20/20	20/20	20/20
Max.Short Current(A)	30/30	30/30	30/30
No.of MPP Trackers	2	2	2
Strings per MPP Tracker	1	1	1
Max.Backfeed Current to The Array (A)	0	0	0
AC Output/Input Data（On-grid）			
Nominal Power Output To Grid（VA）	5000	6000	8000
Max.Power Output To Grid（VA）*	5000	6000	8000
Max.Power From Grid (VA)	10000	12000	16000
Nominal Voltage（V）	400/380,3L/N/PE	400/380,3L/N/PE	400/380,3L/N/PE
Nominal Frequency（Hz）	50/60	50/60	50/60
Nominal AC Current To Grid（A）	7.6	9.1	12.1
Max.AC Current To Grid（A）	7.6	9.1	12.1
Max.AC Current From Grid（A）	15.2	15.7	21
Max.Output Fault Current (Peak and Duration)(A)	190A@1ms	190A@1ms	190A@1ms
Inrush current(Peak and Duration)(A)	145A@1ms	145A@1ms	145A@1ms
Output Power Factor	Adjustable from 0.8 leading to 0.8 lagging	Adjustable from 0.8 leading to 0.8 lagging	Adjustable from 0.8 leading to 0.8 lagging

©Dyness reserves the copyright of this document.

Output THDi (Nominal Power)	<3%	<3%	<3%
Maximum Output Overcurrent Protection (A)	55	55	55
Three Phase Unbalance	YES	YES	YES
AC Output Data (Backup/Load Control)			
Max. Continuous Output Power(VA)	5000	6000	8000
Peak Output Power(VA)**	10000 @1min	12000 @1min	16000 @1min
Max.Output Current (A)***	11.4 (17.4 @1min)	13.6 (17.4 @1min)	18.2 (23.2@1min)
Nominal Output Voltage（Vac）	3/N/PE,220/380,230/400	3/N/PE,220/380,230/400	3/N/PE,220/380,230/400
Nominal Output Frequency（Hz）	50/60	50/60	50/60
Output THDv (@Linear Load）	<3%	<3%	<3%
Switch time	<10ms	<10ms	<10ms
Efficiency			
Max.efficiency	98.0%	98.1%	98.1%
Euro.efficiency	97.2%	97.3%	97.3%
Protection			
Anti-island Protection	Integrated	Integrated	Integrated
PV Insulation Resistance Detection	Integrated	Integrated	Integrated
PV Reverse Protection	Integrated	Integrated	Integrated
Battery Reverse Protection	Integrated	Integrated	Integrated
Residual Current Monitoring Unit	Integrated	Integrated	Integrated
Over Current/Voltage Protection	Integrated	Integrated	Integrated
DC Switch(PV)	Integrated	Integrated	Integrated
Surge Protection	DC Type Ⅱ/AC Type Ⅱ	DC Type Ⅱ/AC Type Ⅱ	DC Type Ⅱ/AC Type Ⅱ
Communication Interface			
Battery BMS	CAN	CAN	CAN
EMS（Modbus）	RS485	RS485	RS485
Meter(Outside)	RS485	RS485	RS485
RCR/DRED	YES(DI)	YES(DI)	YES(DI)
Remote Shut Down	YES(DI)	YES(DI)	YES(DI)
Dry-Point	YES(DO)	YES(DO)	YES(DO)
Cloud	Wi-Fi,LAN	Wi-Fi,LAN	Wi-Fi,LAN
Display/User Interface	LED/LCD/APP	LED/LCD/APP	LED/LCD/APP
General Data			
Operating Temperature Range(℃)	-30-60	-30-60	-30-60
Relative Humidity(%)	0-95%	0-95%	0-95%
Operating Altitude(m)	≤3000	≤3000	≤3000

©Dyness reserves the copyright of this document.

Cooling	Smart Fan Cooling	Smart Fan Cooling	Smart Fan Cooling
Noise(dB)	<40	<40	<40
Weight(kg)	27.2	27.2	27.2
Size(W/H/D)(mm)	500*585*212	500*585*212	500*585*212
Installation	Wall-Mounted	Wall-Mounted	Wall-Mounted
Protection Degree	IP66	IP66	IP66
Protection Class	Class Ⅰ	Class Ⅰ	Class Ⅰ
Certifications&Standards			
Grid Regulation	VDE-AR-N 4105, EN50549-1, PPDS2021	VDE-AR-N 4105, EN50549-1, PPDS2021	VDE-AR-N 4105, EN50549-1, PPDS2021
Safety Regulation	IEC62109-1&2	IEC62109-1&2	IEC62109-1&2
EMC	EN61000-6-1/2/3/4	EN61000-6-1/2/3/4	EN61000-6-1/2/3/4

* According to the local grid regulation

** Can be reached only if PV and battery power is enough

***With three phase unbalance load

©Dyness reserves the copyright of this document.

Model Name	D10K-HT-A	D12K-HT-A	D15K-HT-A
Battery Input Data			
Battery Type	Lithium battery	Lithium battery	Lithium battery
Battery Voltage Range（V）	120~750	120~750	120~750
Nominal Battery Voltage (V)	600	600	600
Max.Charge/Discharge Current(A)	40/40	40/40	40/40
Max.Charge/Discharge Power(W)	15000/11000	18000/13200	22500/16500
PV String Input Data			
Max.PV Input Power（W）	20000	24000	30000
Max.PV Input Voltage（V）	1000	1000	1000
Working Voltage Range(V)	80~950	80~950	80~950
First Feed-in Voltage（V）	100	100	100
MPPT Range For Nominal Power（V）	300~850	300~850	300~850
Nominal PV Input Voltage（V）	750	750	750
Max.Input Current(A)	20/20/20	20/20/20	20/20/20
Max.Short Current(A)	30/30/30	30/30/30	30/30/30
No.of MPP Trackers	3	3	3
Strings per MPP Tracker	1	1	1
Max.Backfeed Current to The Array (A)	0	0	0
AC Output/Input Data（On-grid）			
Nominal Power Output To Grid（VA）	10000	12000	15000
Max.Power Output To Grid（VA）*	10000	12000	15000
Max.Power From Grid (VA)	20000	20000	20000
Nominal Voltage（V）	400/380,3L/N/PE	400/380,3L/N/PE	400/380,3L/N/PE
Nominal Frequency（Hz）	50/60	50/60	50/60
Nominal AC Current To Grid（A）	15.2	18.2	22.7
Max.AC Current To Grid（A）	15.2	18.2	22.7
Max.AC Current From Grid（A）	26.1	26.1	26.1
Max.Output Fault Current (Peak and Duration)(A)	190A@1ms	190A@1ms	190A@1ms
Inrush current(Peak and Duration)(A)	145A@1ms	145A@1ms	145A@1ms
Output Power Factor	Adjustable from 0.8 leading to 0.8 lagging	Adjustable from 0.8 leading to 0.8 lagging	Adjustable from 0.8 leading to 0.8 lagging
Output THDi (Nominal Power)	<3%	<3%	<3%
Maximum Output Overcurrent Protection (A)	55	55	55

©Dyness reserves the copyright of this document.

Three Phase Unbalance	YES	YES	YES
AC Output Data (Backup/Load Control)			
Max. Continuous Output Power(VA)	10000	12000	15000
Peak Output Power(VA)**	18000 @1min	18000 @1min	18000 @1min
Max.Output Current (A)***	22.7 (26.1 @1min)	22.7 (26.1 @1min)	22.7 (26.1 @1min)
Nominal Output Voltage（Vac）	3/N/PE,220/380,230/400	3/N/PE,220/380,230/400	3/N/PE,220/380,230/400
Nominal Output Frequency（Hz）	50/60	50/60	50/60
Output THDv (@Linear Load）	<3%	<3%	<3%
Switch time	<10ms	<10ms	<10ms
Efficiency			
Max.efficiency	98.2%	98.2%	98.2%
Euro.efficiency	97.6%	97.6%	97.6%
Protection			
Anti-island Protection	Integrated	Integrated	Integrated
PV Insulation Resistance Detection	Integrated	Integrated	Integrated
PV Reverse Protection	Integrated	Integrated	Integrated
Battery Reverse Protection	Integrated	Integrated	Integrated
Residual Current Monitoring Unit	Integrated	Integrated	Integrated
Over Current/Voltage Protection	Integrated	Integrated	Integrated
DC Switch(PV)	Integrated	Integrated	Integrated
Surge Protection	DC Type Ⅱ/AC Type Ⅱ	DC Type Ⅱ/AC Type Ⅱ	DC Type Ⅱ/AC Type Ⅱ
Communication Interface			
Battery BMS	CAN	CAN	CAN
EMS（Modbus）	RS485	RS485	RS485
Meter(Outside)	RS485	RS485	RS485
RCR/DRED	YES(DI)	YES(DI)	YES(DI)
Remote Shut Down	YES(DI)	YES(DI)	YES(DI)
Dry-Point	YES(DO)	YES(DO)	YES(DO)
Cloud	Wi-Fi,LAN	Wi-Fi,LAN	Wi-Fi,LAN
Display/User Interface	LED/LCD/APP	LED/LCD/APP	LED/LCD/APP
General Data			
Operating Temperature Range(℃)	-30-60	-30-60	-30-60
Relative Humidity(%)	0-95%	0-95%	0-95%
Operating Altitude(m)	≤3000	≤3000	≤3000
Cooling	Smart Fan Cooling	Smart Fan Cooling	Smart Fan Cooling
Noise(dB)	<40	<45	<45

©Dyness reserves the copyright of this document.

Weight(kg)	27.2	27.2	27.2
Size(W/H/D)(mm)	500*585*212	500*585*212	500*585*212
Installation	Wall-Mounted	Wall-Mounted	Wall-Mounted
Protection Degree	IP66	IP66	IP66
Protection Class	Class Ⅰ	Class Ⅰ	Class Ⅰ
Certifications&Standards			
Grid Regulation	VDE-AR-N 4105, EN50549-1, PPDS2021	VDE-AR-N 4105, EN50549-1, PPDS2021	VDE-AR-N 4105, EN50549-1, PPDS2021
Safety Regulation	IEC62109-1&2	IEC62109-1&2	IEC62109-1&2
EMC	EN61000-6-1/2/3/4	EN61000-6-1/2/3/4	EN61000-6-1/2/3/4

* According to the local grid regulation

** Can be reached only if PV and battery power is enough

***With three phase unbalance load

©Dyness reserves the copyright of this document.

DISCOVER YOUR NATURE

Address: 7th–8th Floors, Building 3 No. 58 Nanhu Road Chengnan Subdistrict, Wuzhong District Suzhou, China
Email: service@dyness-tech.com
Tel: +86 400 666 0655
Web: www.dyness.com

Official Website